Wireless position switch
RF 95 DS LR SW868
Material number: 1300890 (Material number old: 95929003)

Features/Options:

- Thermoplastic enclosure
- Design to EN 50047
- sWave® wireless technology
- No power supply, no wiring and pipe laying required
- Easy programming of receiver
- Output signal can be individually configurated at the receiver
- Actuator: Adjustable rocking lever DS
- Lever angle adjustable in 10° steps
- Position of roller can be adjusted
- Wear-resistant plastic roller
- Actuator can be repositioned by 4 x 90°

Notes
- With metal roller available on request

Dimensions

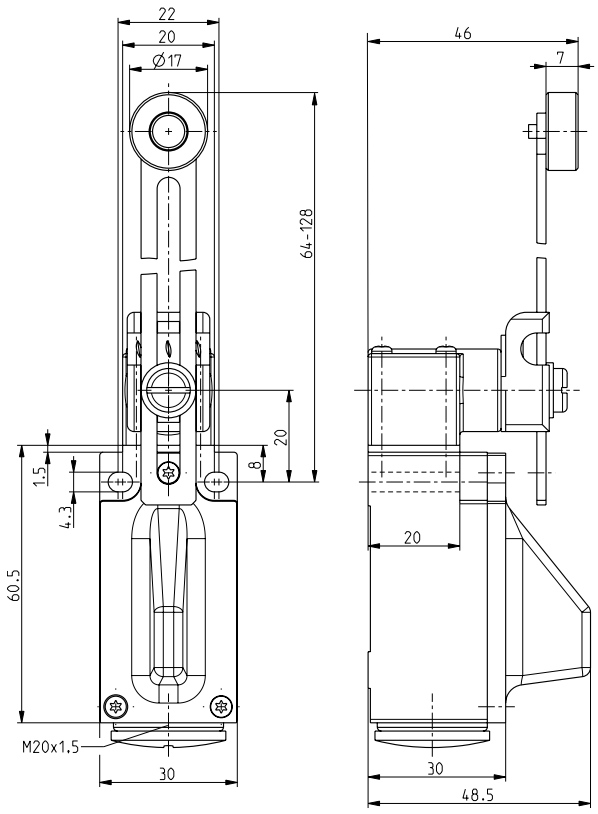

Technical data

Standards	EN 60947-5-1; EN 61000-6-2, -6-3, EN 61000-4-2, -4-20; EN 301 489-1; EN 301 489-3; EN 300 220-1; EN 300 220-2
Enclosure	glass-fibre reinforced, shock-proof thermoplastic, self-extinguishing UL 94-V0
Cover	glass-fibre reinforced, shock-proof thermoplastic, self-extinguishing UL 94-V0
Tightening torque	mounting screw enclosure: max. 1.2 ... 1.3 Nm
Degree of protection	IP 67 to IEC/EN 60529
Protocol	sWave®
Ambient temperature	–20 °C … +65 °C
Operation cycles	approx. 12000 telegrams with repetitions/h
Voltage supply	Electrodynamic energy generator
Frequency	868.3 MHz (EU, Switzerland)
Transmission power	< 25 mW
Data rate	66 kbps
Channel bandwidth	480 kHz
Wireless range	max. 450 m outside, max. 40 m inside
Mechanical life	> 1 million operations
Actuating time	min. 80 ms
Note	no status signal available
Weight	65 g

Errors and omissions excepted.

steute Technologies GmbH & Co. KG | Brückenstraße 91 32584 Löhne, Deutschland | Telefon +49 (0) 5731 745-0 Telefax +49 (0) 5731 745-200 | info@steute.com www.steute.com

Wireless position switch
RF 95 DS LR SW868
Material number: 1300890 (Material number old: 95929003)

Switching diagram

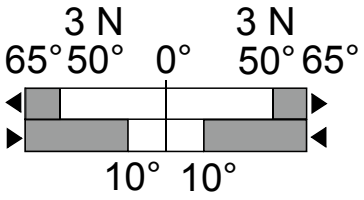

Errors and omissions excepted.

steute Technologies GmbH & Co. KG
Brückenstraße 91
32584 Löhne, Deutschland
Telefon +49 (0) 5731 745-0
Telefax +49 (0) 5731 745-200
info@steute.com
www.steute.com