.steute

Automation

// SYSTEMATIC CONTROL SWITCHGEAR

Emergency pull-wire, Pull-wire, Belt-alignment, Slack-wire switches

4 The Company

PRODUCTS

8 Emergency pull-wire switches

12 Selection table Emergency pull-wire switches
13 Spring pre-stress and travel limitation

One-side actuation
14 Series ZS 70
16 Series ZS 71
20 Series ZS 73
24 Series ZS 75
28 Series ZS 441
32 Series ZS 80

Two-side actuation
34 Series ZS 73 S
38 Series ZS 75 S
42 Series ZS 90 S

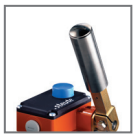

44 Belt-alignment switches

48 Series ES 61 SR
50 Series ZS 73 SR
52 Series ZS 75 SR
54 Series ZS 90 SR

56 Pull-wire switches

60 Selection table pull-wire switches
62 Series ES/EM 95 Z
64 Series ES 51 Z
66 Series ES/EM 41 Z
70 Series ES/EM 61 Z
72 Series ZS 70
73 Series ZS 71

74 Slack-wire switches

78 Series ES/EM 41 DB

80 Appendix

80 Accessories for emergency pull-wire and pull-wire switches
82 Explanation of symbols

.steute

// SAFE SWITCHGEAR FOR DEMANDING AND CRITICAL APPLICATIONS

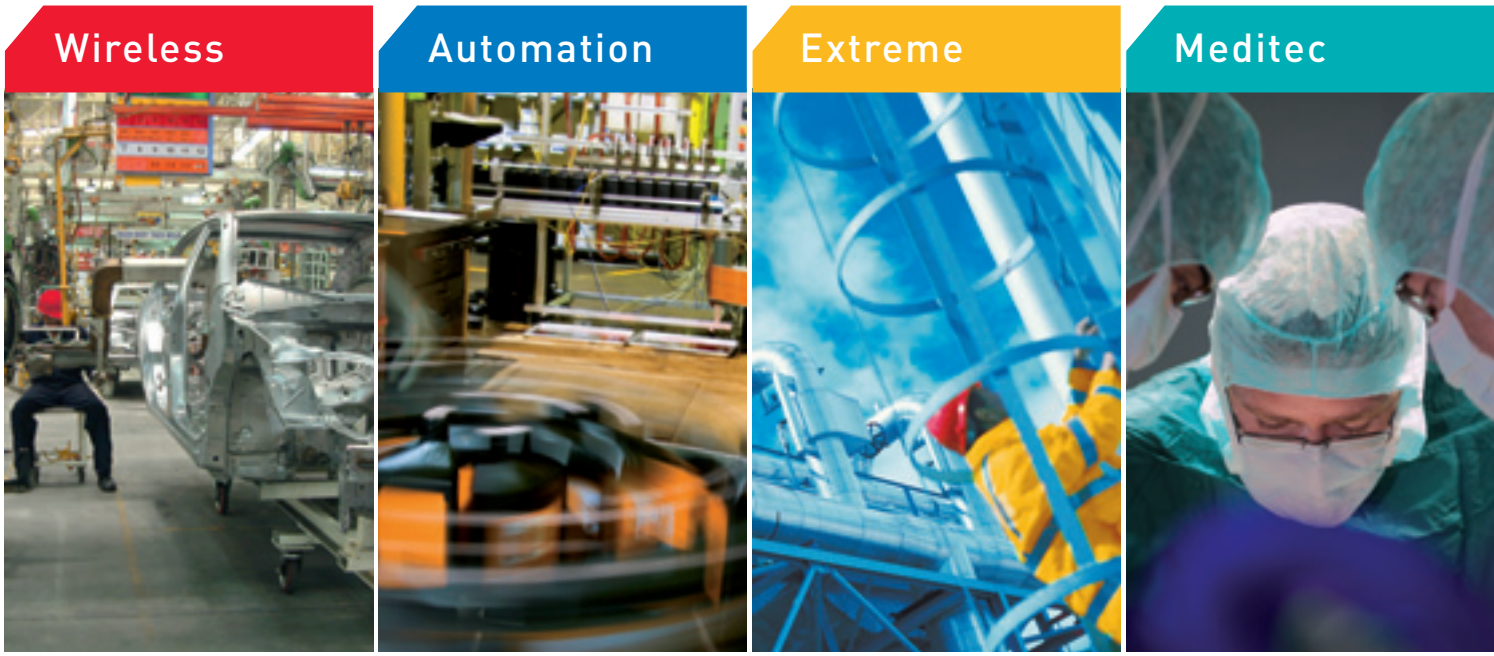

»Safe switchgear for demanding and critical applications«. True to this motto, steute has been providing its customers with innovative, practical and durable switchgear solutions – for over 50 years.

When our customers are successful, so are we. Because we always focus on our customers, our company has grown steadily and sustainably over the last decades. Steute is committed to continuing this growth – in close cooperation with our customers.

We are situated in East Westphalia, a key region for machine building and electrical goods manufacturing. It is home to qualified specialists committed to developing and manufacturing innovative products. It is also the location of renowned universities, research and educational institutions to which we maintain healthy contacts.

Markets are no longer restricted by national borders. This is why our products are developed and tested for extreme conditions all over the world. We take care to ensure that our products are always certified according to the latest international standards. In every industrial or emerging nation in the world, steute has access to qualified specialists who can guarantee competent support and a quick service.

As a medium-sized company we are able to react with speed to customer wishes and market trends. We are continually developing innovative products and using new technologies as we consistently open up new fields of application for our switchgear.

steute is currently active in four different business fields, producing switchgear, sensors and control units for use in industry and in medical equipment:

Wireless
Cable free switchgear and sensors for use in machinery and process plants. These industrial-strength wireless switches communicate with higher level control systems via reliable radio transmission. »Energy harvesting« can play a major role in these products.

Automation
Standard and customised switchgear for machinery and process plants. Tried and tested electromechanical and non-contact technologies for classical applications in industrial automation and process control – always with a view to the latest global requirements.

Extreme
Switchgear and sensors for use in extreme environments or under extreme conditions. Certified products for use in hazardous areas worldwide (e. g. ATEX, IECEx, GOST).

Meditec
A comprehensive range of standard and customised foot and hand controls for medical devices, meeting the highest ergonomic and availability requirements. Produced in accordance with the certified EN ISO 13485 quality management system for medical products.

The following information provides an overview of our standard range of switchgear for complex and demanding applications. We will be happy to provide you with any additional information you require. If you cannot find the solution for your application: just get in touch. We have already helped numerous customers by developing »tailor-made« switchgear for their individual needs.

Marc Stanesby
Managing Director
steute Schaltgeräte GmbH & Co. KG

Emergency pull-wire switches

// Selection table Emergency pull-wire switches
from page 12
// Pre-stress and travel limitation
from page 13

One-side actuation
// Series ZS 70
from page 14
// Series ZS 71
from page 16
// Series ZS 73
from page 20
// Series ZS 75
from page 24
// Series ZS 441
from page 28
// Series ZS 80
from page 32
Two-side actuation
// Series ZS 73 S
from page 34
// Series ZS 75 S
from page 38
// Series ZS 90 S
from page 42

steute
Sicherheits-Seilzugschalter
ZS 80 20/2S WVD
72.9.42.5.01
AC-15
EN 418

Emergency pull-wire switches

Application

Emergency pull-wire switches are of great importance for the man-machine interface in the area of industrial applications. They are, for example, applied on transport and conveyor systems. After manual actuation, work and functional processes are initiated or switched off.

When the new harmonised European standard EN 60947-5-5 concerning functional aspects and design guidelines for emergency-stop devices has come into effect, new requirements must have to be met by these command devices. All emergency pull-wire switches described in this chapter meet the requirements of this standard.

Design and mode of operation

On emergency pull-wire switches the emergency-stop command can be initiated from any point along the pull-wire. They have a positive linkage between the NC contacts and the pull-wire. The emergency pull-wire switches are brought into the operational condition by pre-tensioning the pull-wire, i.e. the NC contacts are then closed and the NO contacts are open. All devices are equipped with wire-breakage detection. In the chapter accessories of the appendix the required accessories for installation are presented.

Emergency pull-wire switches without mechanical latching VD or VS do not conform to the EN 418 and IEC 609745-5-5. It is possible to meet the requirements of these two standards by suitable measurement of the circuitry and control technology.

There are devices with one- and two-side actuation. The wire length, the number of contacts and the mounting position, in the middle or on one side of the system, are the main features when selecting an emergency pull-wire switch.

All emergency pull-wire switches bear the CE mark according to the Machinery Directive 2006/42/EC.

Application

Mounting at head level

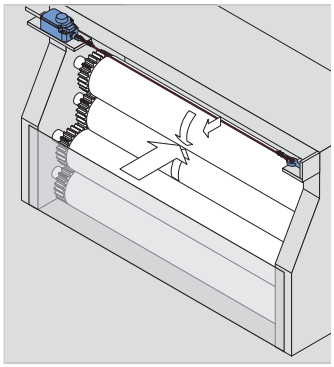

Mounting at hand level

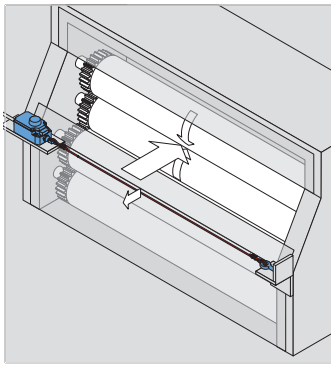

Mounting at foot level

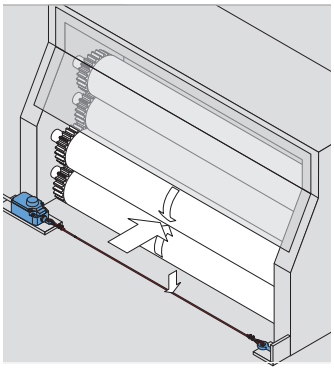

Mounting at hazardous inrunning nips

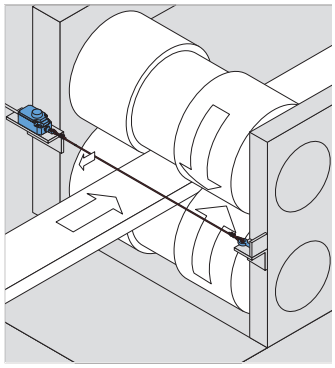

Mountinge at conveyor-belts

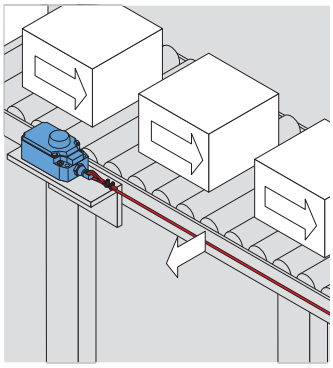

Complete fencing

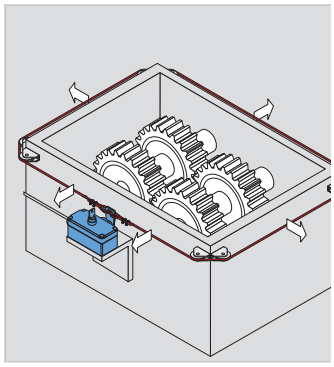

Function principle

All emergency pull-wire switches from steute are provided with a wire-break detection so that the wire must with be mounted with a defined pre-tension force. This value of the pre-tension force vaies depending on the different devices. The appropriate value can be found on the data sheet of the emergency pull-wire switch. With an incorrect mounting cannot be taken in operation, i. e. an unlocking is not possible. By vertically pulling the pull-wire the switching function is carried out. The actuating force is exclusively depending on the spring rate of the reset spring. There are emergency pull-wire switches with one-side and two-side actuatiuon, see drawings below. Emergency pull-wire switches with two-side actuation must always be mounted with two compensation springs. According to EN 60947-5-5 the maximum values of the actuating force F = 200 N and of the actuating travel s = 400 mm must not be exceeded on vertical actuation of the emergency pull-wire switch. In addition, the pull-wire must withstand the 10 times higher vertical pulling force that is required in order to generate the emergency-stop signal.

Interrelation of actuating travel / distance wire support

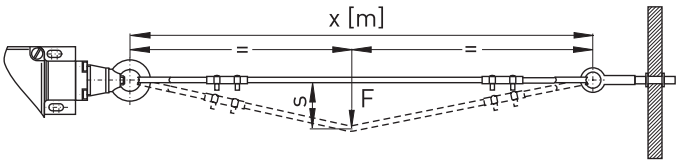

Maximum pull-wire length

The maximum pull-wire length is mainly limited by two basic conditions. On the one hand by the maximum admissible actuating travel s of 400 mm and on the other hand by the thermal change in length of the pull-wire with a fluctuating ambient temperature that may not lead to an undesired actuation of the switch. Because the first basic condition requires a preferably low and the second requires a preferably high elasticity of the system it is necessary to optimise such systems in respect to both basic conditions depending on the operational conditions. In addition, it must be checked if the actuating force F of 200 N is adhered.

Application of compensation springs / Travel limitation

Compensation springs are applied to compensate thermal changes in lengths of the pull-wire and therefore allow for higher pull-wire lengths. In general the following is valid:

- Soft compensation spring with a low spring rate can compensate higher thermal changes in length.
- Though on pull-wire actuation soft compensation springs have a high expansion behaviour and therefore earlier reach the limit of the maximum actuating travel s = 400 mm. Thus the expansion behaviour limitates the maximum pull-wire length at a constant temperature range or the temperature range at a constant pull-wire length.
- The dimensioning of the compensation spring is determined by the reset spring of the switches (Value of the pre-tension force and spring rate of the rest spring), the pull-wire length (length and ela-

Mounting of one-side actuation

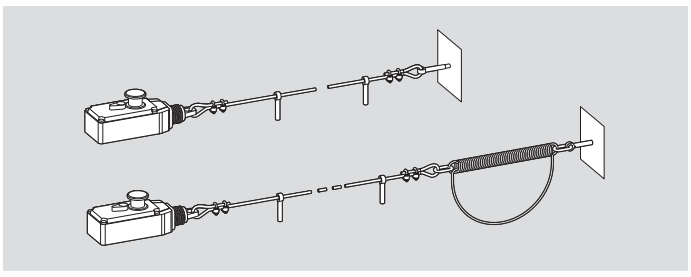

Compensation spring with travel limitation

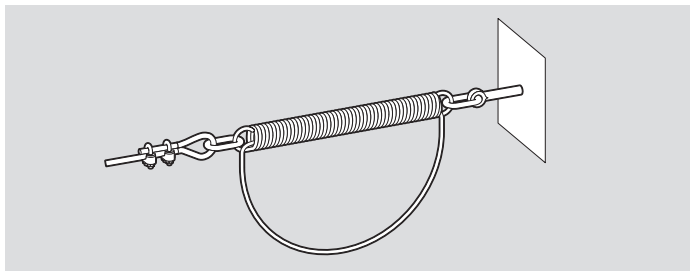

Mounting of two-side actuation

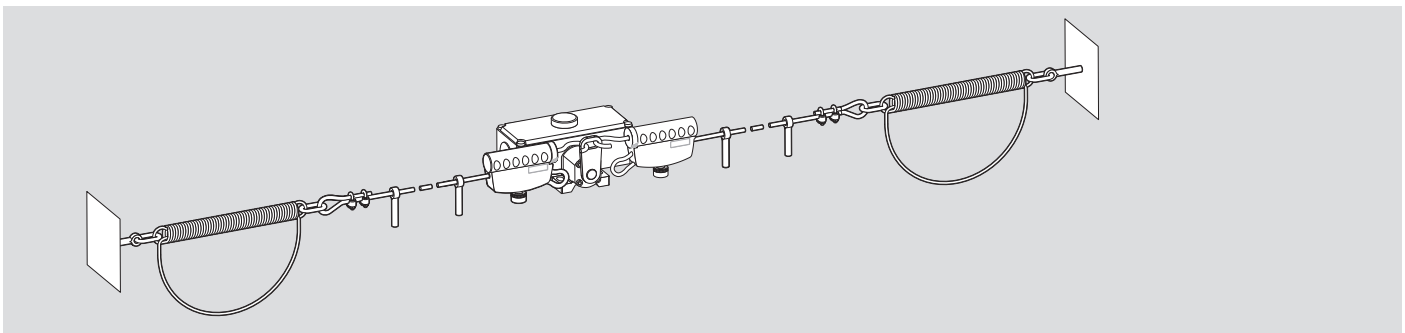

Examples of other compensation springs variants

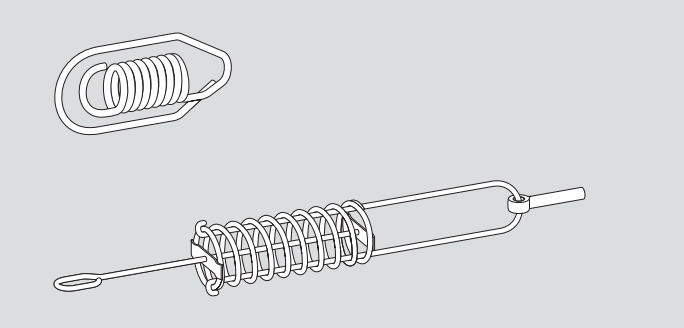

sticitiy of the pull-wire) and the maximum actuatimng travel of s = 400 mm.
- With two-side actuation a travel limitation must be installed, see drawing left page, in order to prevent overstretching of the tension spring
- Before mounting the pull-wire, the red PVC sheath must be removed from the the pull-wire in the clamping range of the pull-wire!

An overstress of the compensation spring is in general prevented by a travel limitation. In practice either additional travel limitations are applied or self-protecting compensation springs are used. Additional travel limitations made of catch-ropes are critical when the function relevant length of the travel limitation is set but have a clear advantage in cost in comparison to compensation springs.

Wire thimble deformation

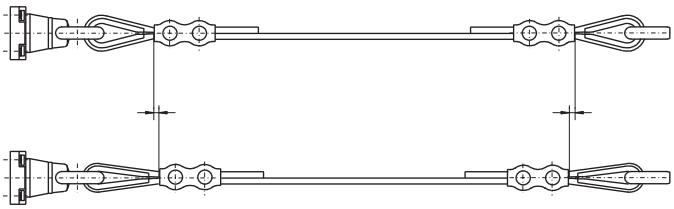

Distance of wire support

The actuating travel required to vertically actuate the switch results from the sum of the spring travels of the switch, pull-wire and where required compensation spring as well as the distance of the wire supports x [m]. This means a larger actuating travel is required with a larger distance of the wire supports when actuating the pull-wire in order to achieve the same actuating distance. Securing a safe switching at a constant pull-wire length the distance of the wire supports must be reduced in order to aim for a wider temperature range.

Type of pull-wire

The expansion behaviouer of the pull-wire is determined b the type of wire. Besides elastic elongation permanent elongations can occur when actuating the pull-wire. Under certain conditions higher pre-tension forces can lead to relaxation processes (temporal pre-tension loss). Statistical spread of the manufacturing process also have an effect on the expansion behaviour.

Therefore it is urgently recommended at least for longer pull-wire lengths to apply pull-wires from steute. These are much tougher and thus optimised for such applications.

Pull-wires from other manufacturers often lengthen gradually because of the creep characteristics of the plastic core (relaxation). If so, it is necessary to regularly check the pull-wire tension and if required to retension the pull-wire. The appropriate security note in the mounting and wiring instructions and the standard application of a tensioner are the prerequisite for a safe function.

Mounting notes

- After fitting the wire, pull strongly on it several times, as the pull-wire and the wire thimble will deform.
- Subsequently, retense the wire using the wire clamp, eye-bolt or tensioner.
- In order to guarantee safe operation, observe the enclosed mounting and wiring instructions.
- According to EN 418, pulleys may only be mounted such that the complete length of the pull-wire can be observed.

Selection table
Emergency pull-wire switches

// Series		// Maximum pull-wire length		
		→	←→	
		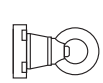		
ZS 70, on page 14 - Thermoplastic enclosure - One-side actuation - 2 contacts	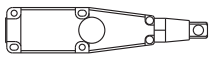	10 m	–	
ZS 71, on page 16 - Metal enclosure - One-side actuation - 3 contacts	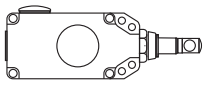	35 m	–	
ZS 73, on page 20 and 34 - Metal enclosure - One-side actuation: ZS 73 - two-side actuation: ZS 73 S - 2 contacts	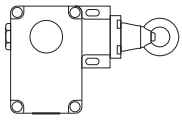	130 m	2 x 100 m	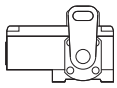
ZS 75, on page 24 and 38 - Metal enclosure - One-side actuation: ZS 75 - Two-side actuation: ZS 75 S - 4 contacts	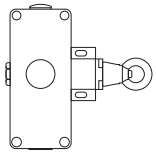	130ß m	2 x 100 m	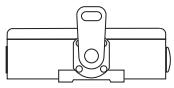
ZS 441, on page 28 - Metal enclosure - One-side actuation - 2 contacts	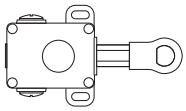	60 m	–	
ZS 80, on page 32 - Metal enclosure - One-side actuation - 4 contacts	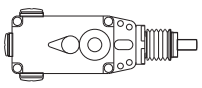	100 m	–	
ZS 90 S, on page 42 - Polyester resin enclosure - Two-side actuation - 4 contacts	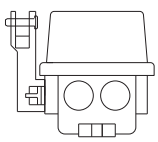	–	2 x 50 m	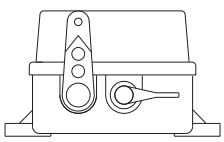

Emergency pull-wire switches
// Pre-stress and actuating forces

Notes
- The values are indicated for an ambient temperature of 20 °C at the stated wire length.
- The linear expansion of the wire due to strain and deformation of the wire thimble is not considered.
- The actuating forces are only approximate values, due to the spring forces being subject to tolerances.

Actuating forces and travel between supports

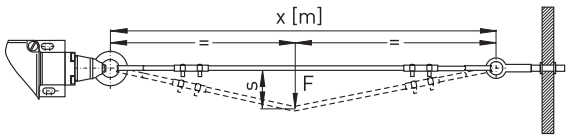

Emergency pull-wire switch	Wire length betw. supports x [m]	Pre-stress force [N]	Actuating travel s [cm]	Actuating force F [N]	Wire length [m]	Ordering index
ZS 70	2,5	50	7	10	<10	–
ZS 71	3	100	7	12	10	
ZS 73 ZS 73 S	5 5 4	120-180 295-390 –	13 13 13	19-25 38-60 51-85	50-130 50-130 2 x 30-65	/120-180N /295-390N –
ZS 75 ZS 75 S	5 5 4	120-180 295-390 –	13 13 13	19-25 38-60 51-85	50-130 50-130 2 x 30-65	/120-180N /295-390N –
ZS 441	5	150	10	14	5-15	/150N
ZS 80	5	100	22	32	75	–
ZS 90 S	4	–	15	40	2 x 50	–

Emergency pull-wire switches, one-side actuation
// Series ZS 70

Features/Options
- Thermoplastic enclosure
- 2 contacts
- Mounting details to DIN EN 50 041
- Small design
- Wire length up to 10 m
- Push button release
- Available without unlocking mechanism (per DIN EN 60947-5-1)
- Wire pull and breakage detection

// ZS 70

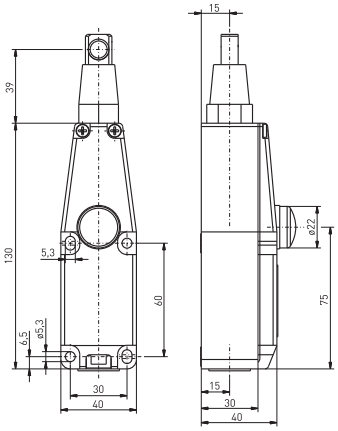

Technical data

Standards	IEC/EN 60947-5-1, IEC/EN 60947-5-5, EN 418, EN ISO 13849-1
Enclosure	glass-fibre reinforced, shock-proof thermoplastic, ultramid
Cover	glassfibre reinforced, shock-proof thermoplastic, ultramid
Degree of protection	IP 67 to IEC/EN 60529
Contact material	silver
Switching elements	change-over contact with double break or 2 NC contacts
Switching system	snap action, positive break NC contacts ⊖
Connection	screw terminals
Cable section	max. 2.5 mm^2 (incl. conductor ferrules)
Cable entry	1 x M20 x 1.5
B_{10d} (10 % load)	200 000
T_M	max. 20 years
U_{imp}	6 kV
U_i	400 V
I_{the}	6 A
Utilisation category	AC-15
I_e/U_e	6 A/400 VAC
Max. fuse rating	6 A gG/gN-fuse
Ambient temperature	–25 °C ... +70 °C
Mech. life	> 100 000 operations
Indicator lamp	as option
Max. wire length	10 m
Features	wire pull and breakage detection
Approvals	

Contact variants: switch travel/contacts

	Snap action	Order No.
1 NC/1 NO contact	ZS 70 1Ö/1S VD 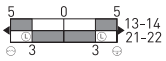	70141501
2 NC contacts	ZS 70 2Ö VD 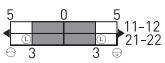	70541501

Ordering details ZS 70 1Ö/1S VD

- VD push button release
- 1 NC/1 NO contact (2Ö)
- Series
- Emergency pull-wire switch

At 2.5 m distance intermediate wire supports are required. One wire thimble is provided. Details related to pre-stress and actuating forces are indicated on page 13.

Legend

1 Cable tensioner system TS 65	04.71.7101
2 Eye bolt M8 x 70 with nut	04.00.7112
3 Wire clamp	01.10.0003
4 Wire thimble 3B	01.10.0001
6 Pull-wire per metre	01.09.0011

// Mounting without tension spring

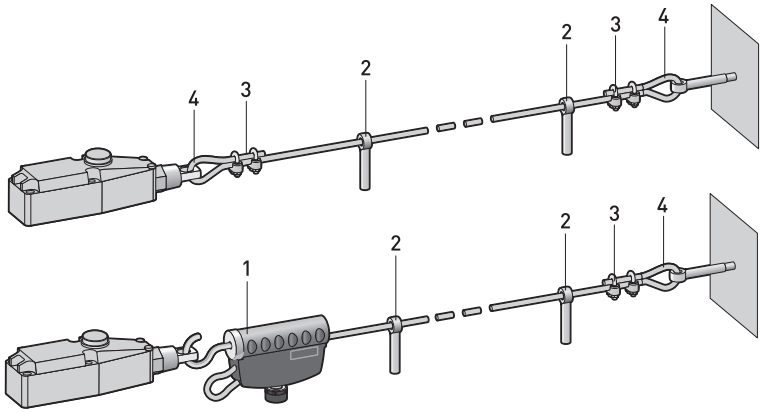

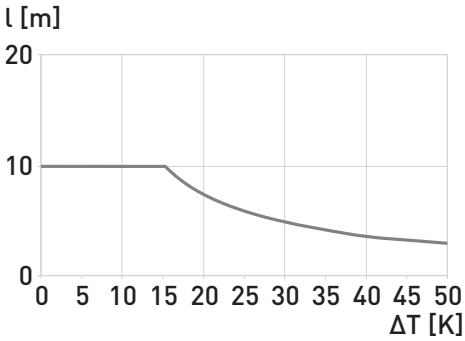

Emergency pull-wire switches, one-side actuation
// Series ZS 71

Features/Options
- Metal enclosure
- 3 contacts
- Small design
- Wire length up to 35 m
- Release by push button or key possible
- Available without unlocking mechanism (per DIN EN 60947-5-1)
- Wire pull and breakage detection
- Ex version available
- IP 69K version available, see www.steute.com section »Extreme«

// ZS 71

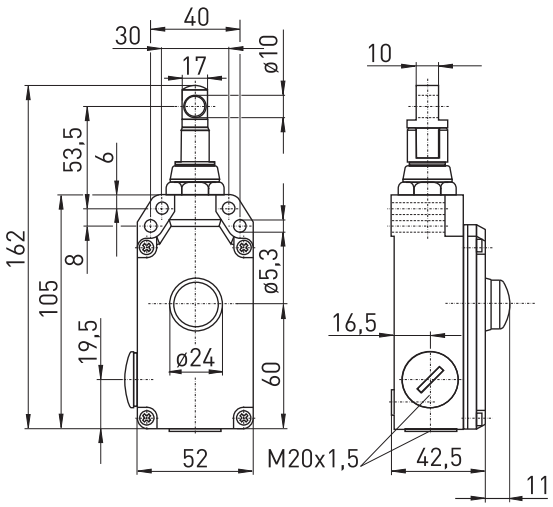

Technical data

Standards	IEC/EN 60947-5-1, IEC/EN 60947-5-5, EN 418, EN ISO 13849-1
Enclosure	aluminium die-cast, enamel finish
Cover	glass-fibre reinforced, shock-proof thermoplastic, ultramid
Degree of protection	ZS 71 VD, ZS 71 WVD and ZS 71 NA: IP 65; ZS 71 VS and ZS 71 WVS: IP 54 to IEC/EN 60529
Contact material	silver
Switching elements	2 NC/1 NO contacts with double break or
Switching system	snap action, positive break NC contacts ⊖
Connection	screw terminals
Cable section	max. 2.5 mm^2 (incl. conductor ferrules)
Cable entry	2 x M20 x 1.5
B_{10d} (10 % load)	200 000
T_M	max. 20 years
U_{imp}	6 kV
U_i	400 V
I_{the}	6 A
Utilisation category	AC-15
I_e/U_e	6 A/400 VAC
Max. fuse rating	6 A gG/gN-fuse
Ambient temperature	–25 °C ... +70 °C
Mech. life	> 100 000 operations
Indicator lamp	as option
Max. wire length	35 m
Features	wire pull and breakage detection
Approvals	

Contact variants: switch travel/contacts

	Snap action
2 NC/1 NO contact	ZS 71 2Ö/1S 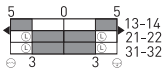

Ordering details ZS 71 2Ö/1S WVD-A/100 N-G

- ZS 71 – Emergency pull-wire switch
- Series
- 2 NC/1 NO contact
- W watertight collar
- VD push button release (VS key release on request)
- A position indicator (NA emergency-stop button)
- 100 N pre-stress force
- Indicator lamp (app.)

At 3 m distance intermediate wire supports are required. One wire thimble is provided. Details related to pre-stress and actuating forces are indicated on page 13.

Emergency pull-wire switches, one-side actuation
// Series ZS 71, mounting

Legend

1 Cable tensioner system TS 65	04.71.7101
2 Eye bolt M8 x 70 with nut	04.00.7112
3 Wire clamp	01.10.0003
4 Wire thimble 3B	01.10.0001
5 Tension spring ZS 71-100N	04.00.7154
6 Pull-wire per metre	01.09.0011

// Mounting without tension spring

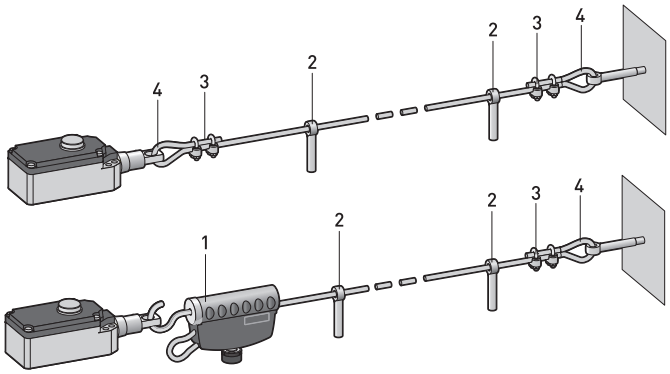

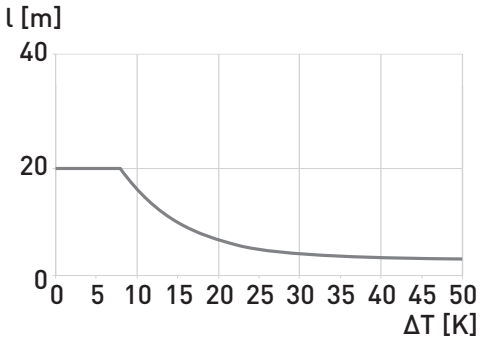

// Mounting with tension spring

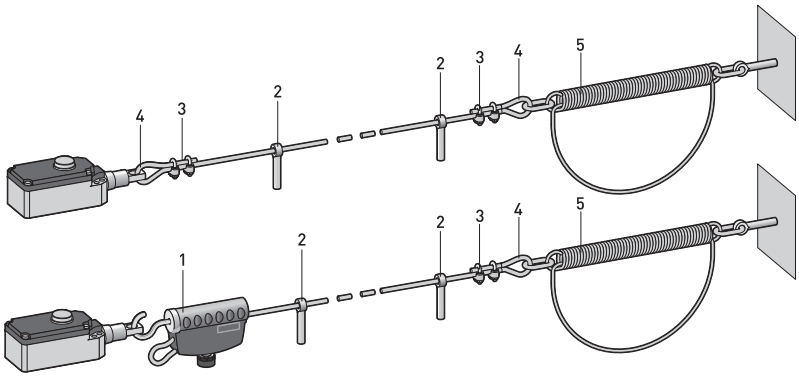

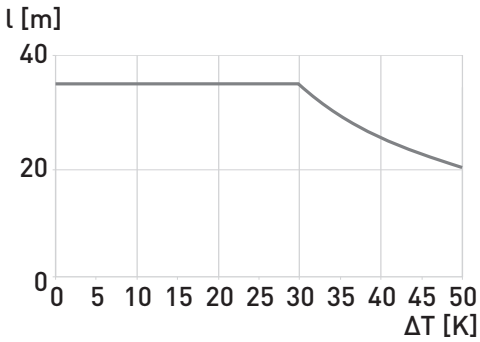

// Mounting with 2 emergency pull-wire switches

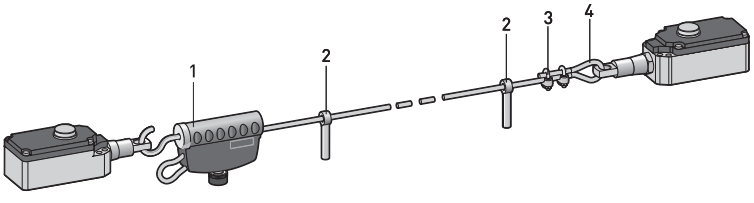

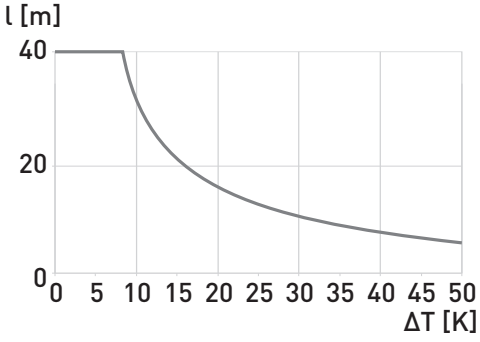

Emergency pull-wire switches, one-side actuation
// Series ZS 71, variants

Features/Options
- Indicator lamps for various voltages are indicated in chapter accessories in the appendix
- Indicator lamp position in the left side cable entry

// Push-button release VD

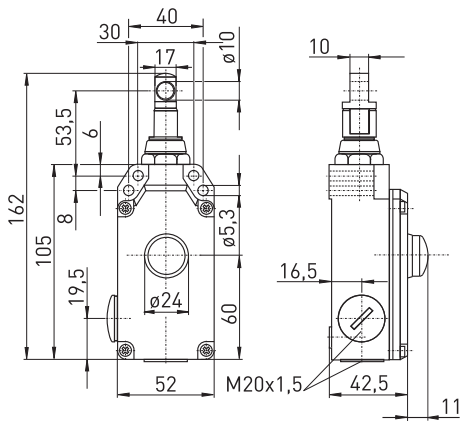

Push-button release
ZS 71 2Ö/1S VD/100 N

Order Number
71941901

// Watertight collar W

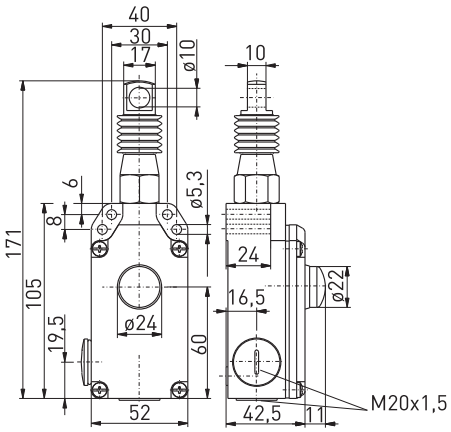

Features/Options
- Watertight collar for protection against penetration of dirt

Watertight collar/Push-button release
ZS 71 2Ö/1S WVD/100 N

Order Number
71942904

// Key release VS

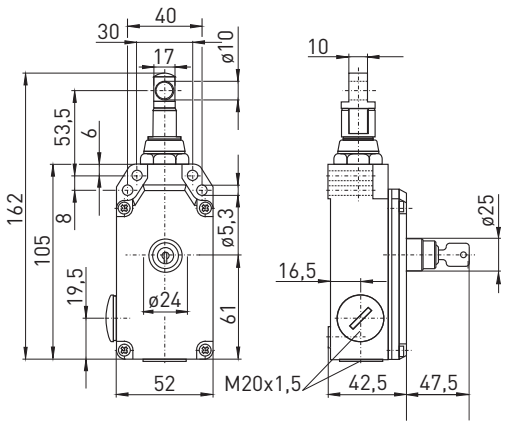

Key release
ZZS 71 2Ö/1S VS/100 N

Order Number
on request

Key release/Watertight collar
ZS 71 2Ö/1S WVS/100 N

Order Number
on request

Features/Options
- Indicator lamps for various voltages are indicated in chapter accessories in the appendix
- Indicator lamp position in the left side cable entry

// Position indicator A

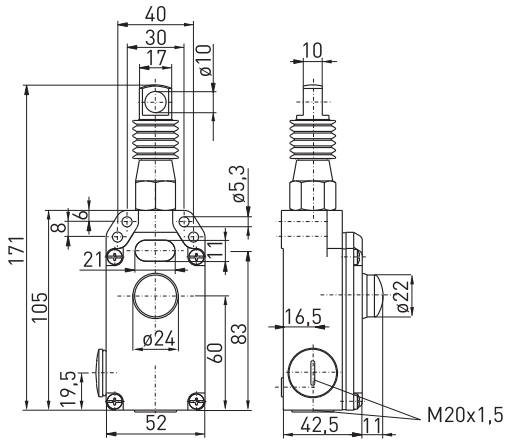

Position indicator/Push-button release	Bestellnummer
ZS 71 2Ö/1S VD-A/100 N	71941903
Position indicator/Push-button release/Collar	Bestellnummer
ZS 71 2Ö/1S WVD-A/100 N	71942902
Position indicator/Key release	Bestellnummer
ZS 71 2Ö/1S VS-A / 100 N	on request
Position indicator/Key release/Collar	Bestellnummer
ZS 71 2Ö/1S WVS-A/100 N	on request

// Emergency-stop push-button NA

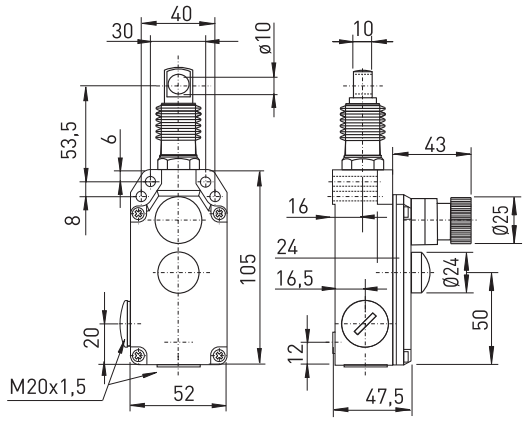

Features/Options
- Position indicator A not available for variant ZS 71 NA
- Version with emergency-stop push button for direct and fast actuation at the switch

Emergency-stop push-button	Order Number
ZS 71 2Ö/1S VD-NA/100 N	on request
ZS 71 2Ö/1S WVD-NA/100 N	on request

Emergency pull-wire switches, one-side actuation
// Series ZS 73

Features/Options
- Metal enclosure
- 2 contacts
- Wire length up to 130 m
- 2 various spring force variants (actuating forces)
- Available without unlocking mechanism (per DIN EN 60947-5-1)
- Release by push button or key possible
- Wire pull and breakage detection
- Ex version available

// ZS 73

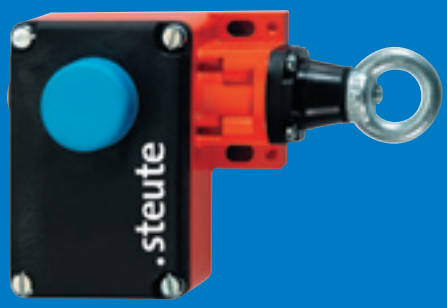

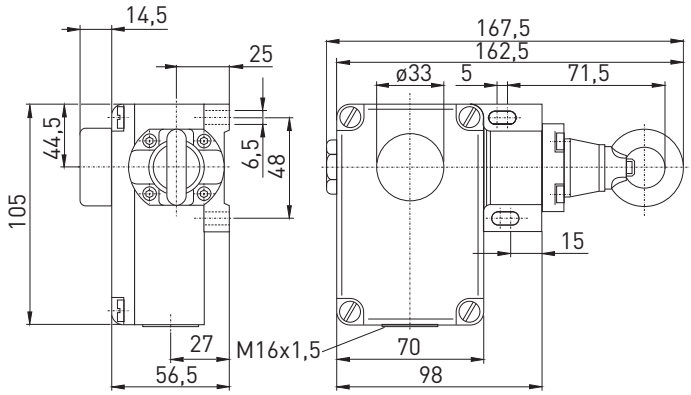

Technical data

Standards	IEC/EN 60947-5-1, IEC/EN 60947-5-5, EN 418, EN ISO 13849-1
Enclosure	aluminium die-cast, enamel finish; ZS 73 NIRO: aluminium die-cast, hard-coated and enamelled
Cover	glass-fibre reinforced, shock-proof thermoplastic, ultramid
Degree of protection	ZS 73 WVD: IP 65; ZS 73 VD, ZS 73 VS and ZS 73 WVS: IP 54 to IEC/EN 60529
Contact material	silver
Switching elements	change-over contact with double break or 2 NC contacts
Switching system	snap action, positive break NC contacts ⊖
Connection	screw terminals
Cable section	max. 2.5 mm² (incl. conductor ferrules)
Cable entry	1 x M16 x 1.5
B_{10d} (10 % load)	200 000
T_M	max. 20 years
U_{imp}	6 kV
U_i	400 V
I_{the}	6 A
Utilisation category	AC-15
I_e/U_e	6 A/400 VAC
Max. fuse rating	6 A gG/gN-fuse
Ambient temperature	–25 °C ... +70 °C
Mech. life	> 100 000 operations
Indicator lamp	as option
Max. wire length	130 m
Features	wire pull and breakage detection
Approvals	

Contact variants: switch travel/contacts

	Snap action
1 NC/1 NO contact	ZS 73 1Ö/1S 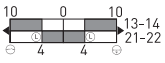
2 NC contacts	ZS 73 2Ö 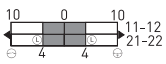

Ordering details ZS 73 1Ö/1S WVD-NIRO/120-180 N-G

- Indicator lamp (app.)
- 120-180 N pre-stress force (295-390 N)
- NIRO pull-wire unit
- VD push button release (VS key release)
- W watertight collar
- 1 NC/1 NO contact (2Ö)
- Series

Emergency pull-wire switch

At 5 m distance intermediate wire supports are required. One wire thimble is provided. Details related to pre-stress and actuating forces are indicated on page 13.

Emergency pull-wire switches, one-side actuation
// Series ZS 73, mounting

Legend

1 Cable tensioner system TS 65	04.71.7101
2 Eye bolt M8 x 70 with nut	04.00.7112
3 Wire clamp	01.10.0003
4 Wire thimble 3B	01.10.0001
5 Tension spring ZS 73/75-200N for spring force variant 120-180N	04.00.7155
Tension spring ZS 73/75-400N for spring force variant 295-390N	04.00.7157
6 Pull-wire per metre	01.09.0011

// Mounting without tension spring

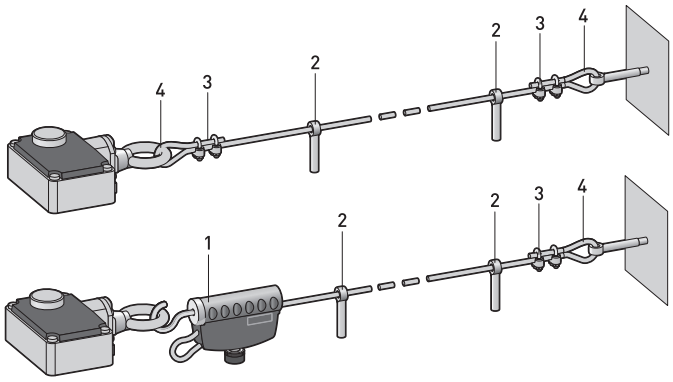

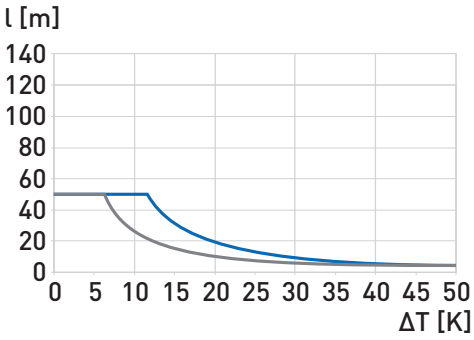

// Mounting with tension spring

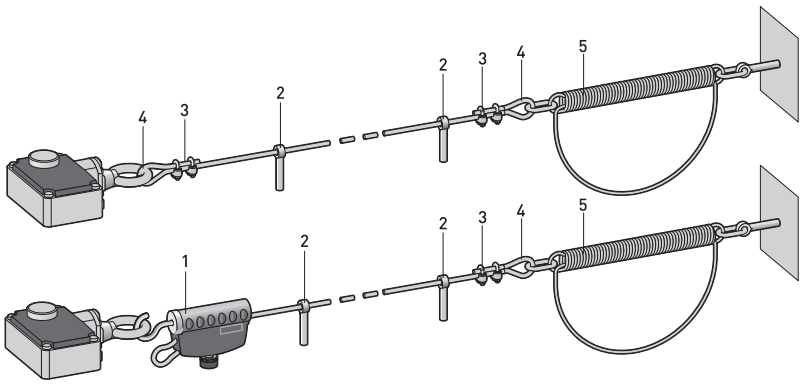

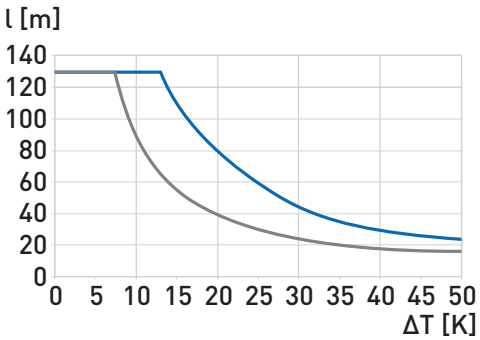

Temperature difference/ Wire length

Legend
- 120-180 N standard version
- 295-390 N for long pull-wire lengths and strong vibrations

Emergency pull-wire switches, one-side actuation
// Series ZS 73, variants

Features/Options
- Indicator lamp possible on request
- With 2 cable entries available on request

// Push-button release VD

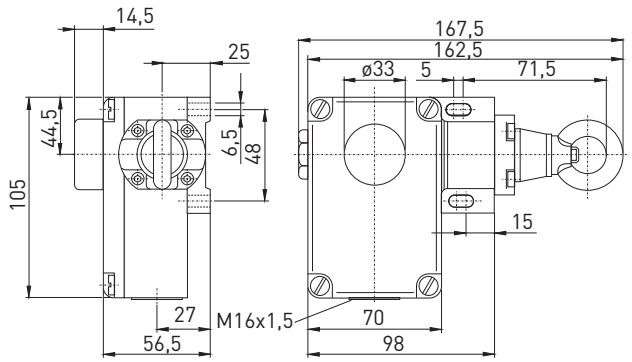

Push-button release	Order Number
ZS 73 1Ö/1S VD/120-180 N	73141909
ZS 73 1Ö/1S VD/295-390 N	73141501
ZS 73 2Ö VD/120-180 N	73541907
ZS 73 2Ö VD/295-390 N	73541502

// Watertight collar W

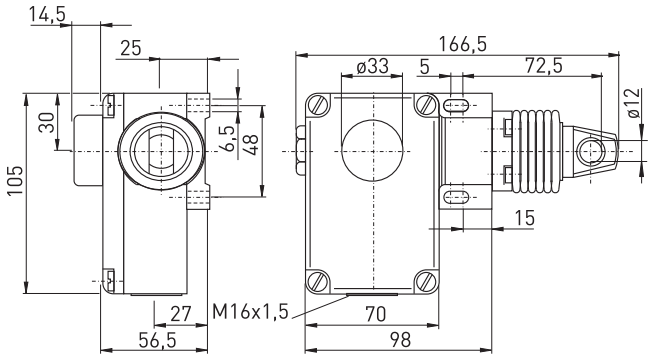

Features/Options
- Watertight collar for protection against penetration of dirt

Watertight collar/Push-button release	Order Number
ZS 73 1Ö/1S WVD/120-180 N	73142908
ZS 73 1Ö/1S WVD/295-390 N	73142501
ZS 73 2Ö WVD/120-180 N	73542907
ZS 73 2Ö WVD/295-390 N	73542502

// Stainless Steel ZS 73 NIRO

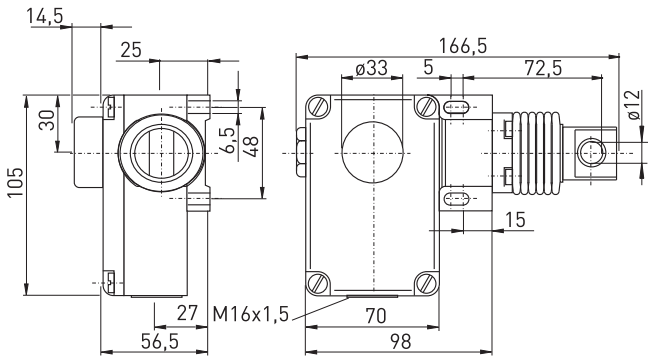

Features/Options
- ZS 73 NIRO: pull-wire unit and screws made of stainless steel 1.4305, hard-coated enclosure with enamel finish

Stainless Steel/Push-button release	Order Number
ZS 73 1Ö/1S WVD/120-180 N Niro	73142906
ZS 73 1Ö/1S WVD/295-390 N Niro	73142903
ZS 73 2Ö WVD/295-390 N Niro	73542916

// Key release VS

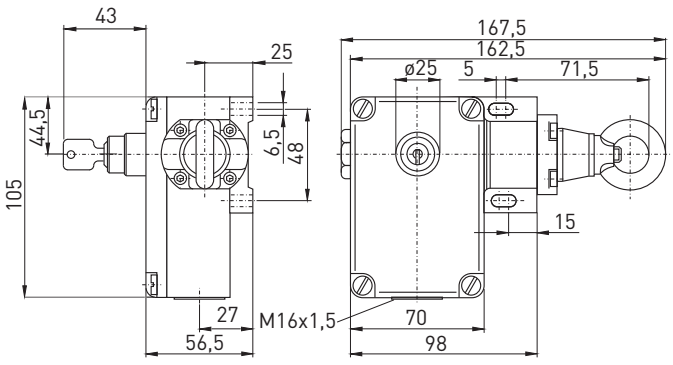

Key release	Order Number
ZS 73 1Ö/1S VS/295-390 N	73141601
ZS 73 2Ö VS/295-390 N	73541601

Emergency pull-wire switches, one-side actuation
// Series ZS 75

Features/Options
- Metal enclosure
- 2 or 4 contacts
- Wire length up to 130 m
- 2 various spring force variants (actuating forces)
- Release by push button or key possible
- Available without unlocking mechanism (per DIN EN 60947-5-1)
- Wire pull and breakage detection
- Version with Dupline or Dupline Safe available
- Ex version available

// ZS 75

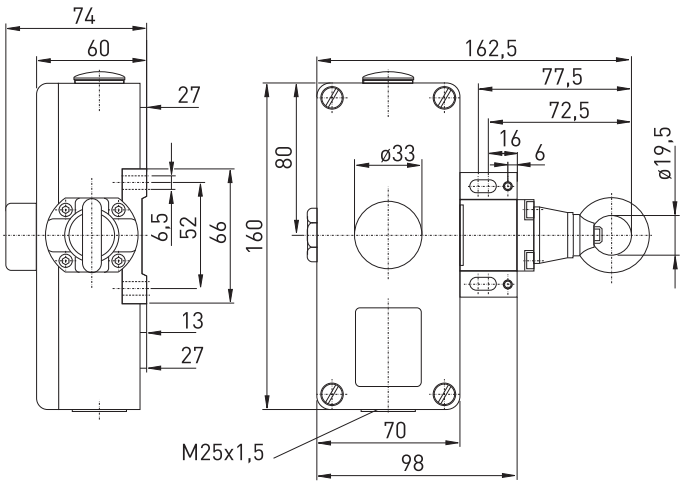

Technical data

Standards	IEC/EN 60947-5-1, IEC/EN 60947-5-5, EN 418, EN ISO 13849-1
Enclosure	aluminium die-cast, enamel finish
Cover	aluminium die-cast, enamel finish
Degree of protection	ZS 75 WVD: IP 65; ZS 75 VD, ZS 75 VS and ZS 75 WVS: IP 54 to IEC/EN 60529
Contact material	silver
Switching elements	change-over contact with double break or 2 NO/2 NC or 4 NC contacts
Switching system	snap action, positive break NC contacts ⊖
Connection	screw terminals
Cable section	max. 2.5 mm² (incl. conductor ferrules)
Cable entry	2 x M25 x 1.5
B_{10d} (10 % load)	200 000
T_M	max. 20 years
U_{imp}	6 kV
U_i	400 V
I_{the}	6 A
Utilisation category	AC-15
I_e/U_e	6 A/400 VAC
Max. fuse rating	6 A gG/gN-fuse
Ambient temperature	–25 °C ... +70 °C
Mech. life	> 100 000 operations
Indicator lamp	as option
Max. wire length	130 m
Features	wire pull and breakage detection
Approvals	

Contact variants: switch travel/contacts

	Snap action
1 NC/1 NO contact	**ZS 75 1Ö/1S** 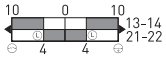
2 NC/2 NO contacts	**ZS 75 2Ö/2S** 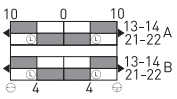
4 NC contacts	**ZS 75 4Ö** 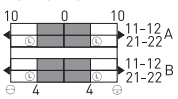

Ordering details ZS 75 1Ö/1S WVD/120-180 N-G-DP

- Dupline (DPS Dupline Safe)
- Indicator lamp, accessories (app.)
- 120-180 N pre-stress force (295-390 N)
- VD push button release (VS key release)
- W watertight collar
- 1 NC/1 NO contact (2Ö/2S, 4Ö)
- Series
- Emergency pull-wire switch

At 5 m distance intermediate wire supports are required. One wire thimble is provided. Details related to pre-stress and actuating forces are indicated on page 13.

Emergency pull-wire switches, one-side actuation
// Series ZS 75, mounting

Legend

1 Cable tensioner system TS 65	04.71.7101
2 Eye bolt M8 x 70 with nut	04.00.7112
3 Wire clamp	01.10.0003
4 Wire thimble 3B	01.10.0001
5 Tension spring ZS 73/75-200N for spring force variant 120-180N	04.00.7155
Tension spring ZS 73/75-400N for spring force variant 295-390N	04.00.7157
6 Pull-wire per metre	01.09.0011

// Mounting without tension spring

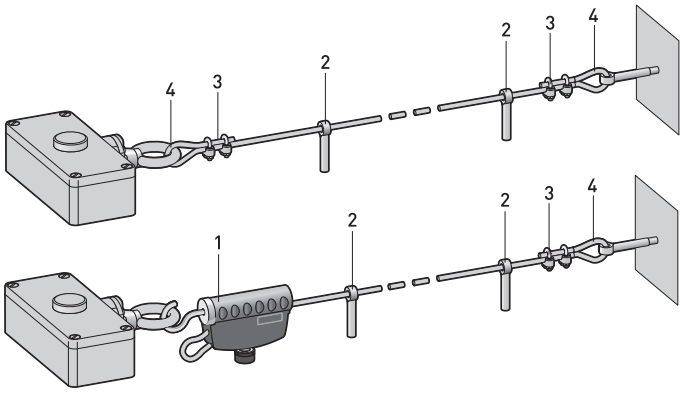

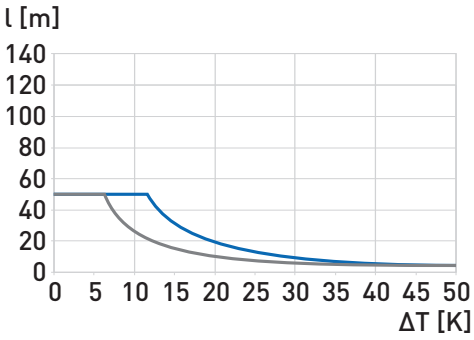

// Mounting with tension spring

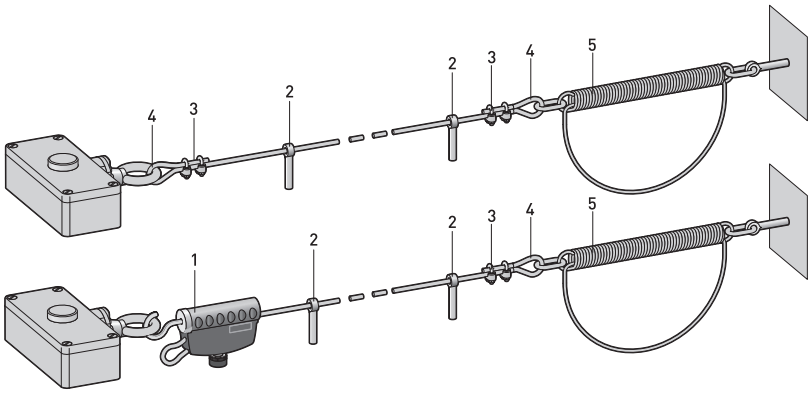

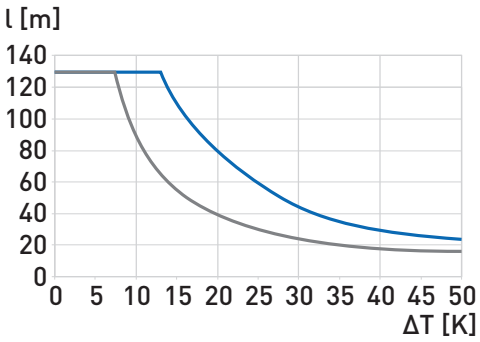

Temperature difference/ Wire length

Legend
- 120-180 N standard version
- 295-390 N for long pull-wire lengths and strong vibrations

Emergency pull-wire switches, one-side actuation
// Series ZS 75, variants

Features/Options
- Indicator lamps for various voltages are indicated in chapter accessories in the appendix

// Push-button release VD

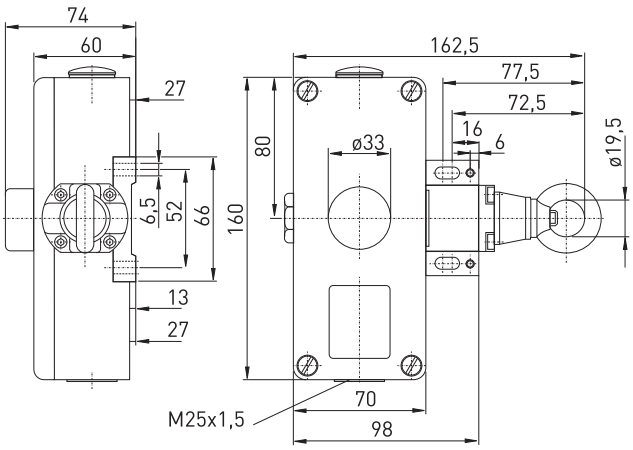

Push-button release	Order Number
ZS 75 1Ö/1S VD/120-180 N	75141904
ZS 75 1Ö/1S VD/295-390 N	75141501
ZS 75 2Ö/2S VD/120-180 N	75441504
ZS 75 2Ö/2S VD/295-390 N	75441502
ZS 75 4Ö VD/120-180 N	75941906
ZS 75 4Ö VD/295-390 N	75941502

// Watertight collar W

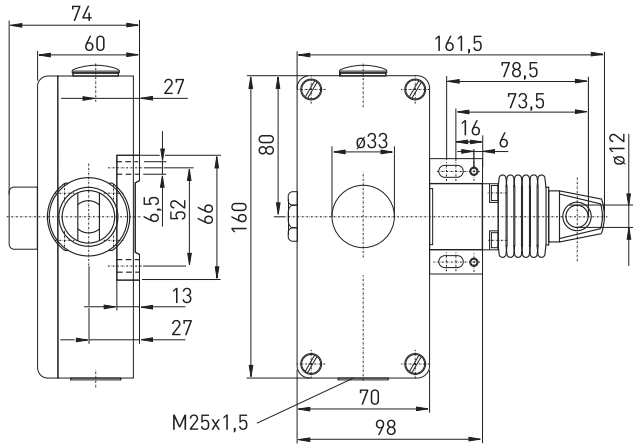

Features/Options
- Watertight collar for protection against penetration of dirt

Watertight collar/Push-button release	Order Number
ZS 75 1Ö/1SWVD/120-180 N	75142503
ZS 75 1Ö/1S WVD/295-390 N	75142501
ZS 75 2Ö/2S WVD/120-180 N	75442507
ZS 75 2Ö/2S WVD/295-390 N	75442505
ZS 75 4Ö WVD/120-180 N	75942910
ZS 75 4Ö WVD/295-390 N	75942501

// Key release VS

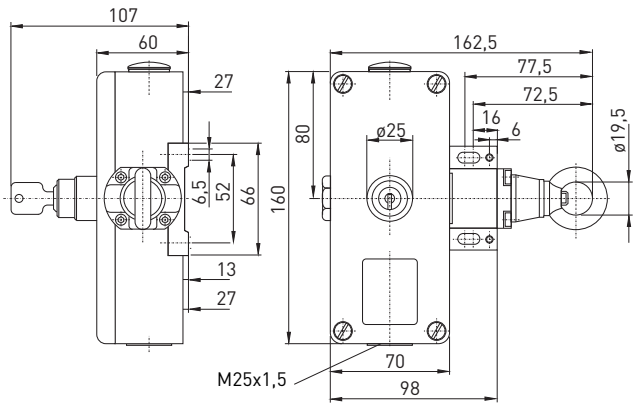

Key release	Order Number
ZS 75 1Ö/1S VS/295-390 N	75141601
ZS 75 2Ö/2S VS/120-180 N	75441604
ZS 75 2Ö/2S VS/295-390 N	75441602

PRODUCTION PROCESS ASSEMBLY

MOUNTING OF THE SWITCH INSERTS AT EMERGENCY PULL-WIRE SWITCHES

Emergency pull-wire switches, one-side actuation
// Series ZS 441

Features/Options
- Metal enclosure
- 2 contacts
- Wire length up to 60 m
- 150 N spring force for max. 60 m
- Release by push button or key possible
- Available without unlocking mechanism (per DIN EN 60947-5-1)
- Wire pull and breakage detection

// ZS 441

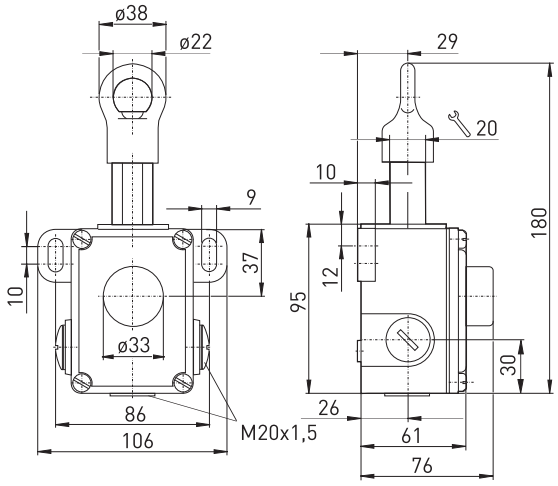

Technical data

Standards	IEC/EN 60947-5-1, IEC/EN 60947-5-5, EN 418, EN ISO 13849-1
Enclosure	aluminium die-cast, enamel finish
Cover	aluminium die-cast, enamel finish
Degree of protection	ZS 441 VD: IP 65; ZS 441 VS: IP 54 to IEC/EN 60529
Contact material	silver
Switching elements	change-over contact with double break or 2 NC contacts
Switching system	snap action, positive break NC contacts ⊖
Connection	screw terminals
Cable section	max. 2.5 mm^2 (incl. conductor ferrules)
Cable entry	3 x M20 x 1.5
B_{10d} (10 % load)	200 000
T_M	max. 20 years
U_{imp}	6 kV
U_i	400 V
I_{the}	6 A
Utilisation category	AC-15
I_e/U_e	6 A/400 VAC
Max. fuse rating	6 A gL/gG D-fuse
Ambient temperature	–25 °C ... +70 °C
Mech. life	> 100 000 operations
Indicator lamp	as option
Max. wire length	60 m
Features	wire pull and breakage detection
Approvals	cULus, PG

Contact variants: switch travel/contacts

	Snap action
1 NC/1 NO contact	ZS 441 1Ö/1S 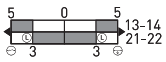
2 NC contacts	ZS 441 2Ö 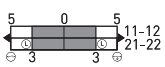

Ordering details ZS 441 1Ö/1S VD/150 N-G

- ZS 441 – Emergency pull-wire switch
- Series
- 1Ö/1S – 1 NC/1 NO contact (2Ö)
- VD – push button release (VS key release)
- 150 – 150 N pre-stress force
- N – Indicator lamp, accessories (appendix)

At 5 m distance intermediate wire supports are required. One wire thimble is provided. Details related to pre-stress and actuating forces are indicated on page 13.

Emergency pull-wire switches, one-side actuation
// Series ZS 441, mounting

Legend

1 Cable tensioner system TS 65	04.71.7101
2 Eye bolt M8 x 70 with nut	04.00.7112
3 Wire clamp	01.10.0003
4 Wire thimble 3B	01.10.0001
5 Tension spring ZS 73/75-200N	04.00.7155
6 Pull-wire per metre	01.09.0011

// Mounting without tension spring

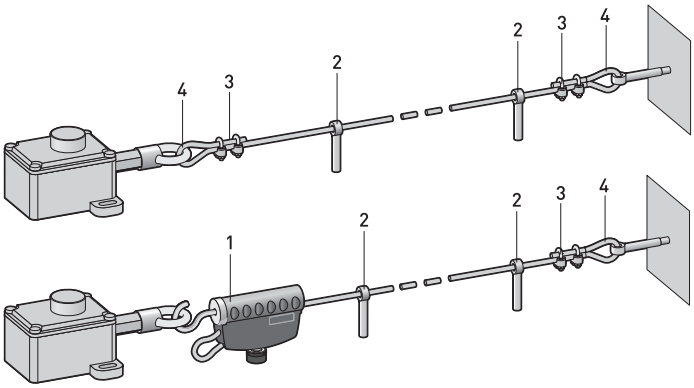

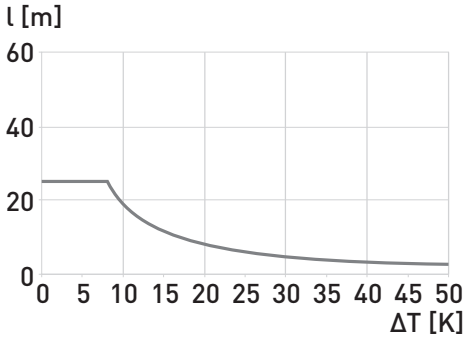

// Mounting with tension spring

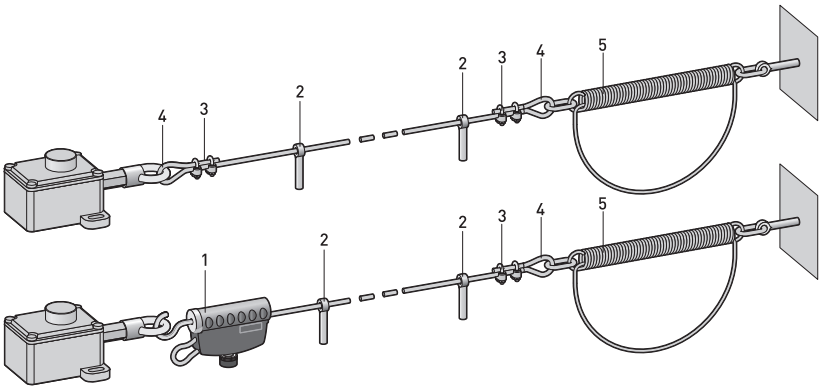

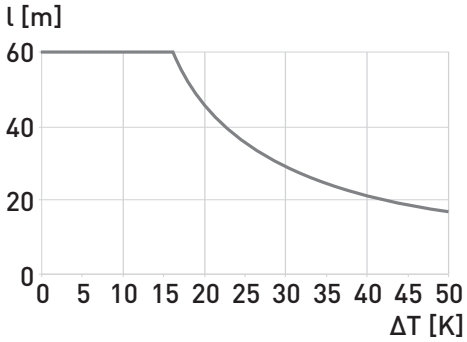

Emergency pull-wire switches, one-side actuation
// Series ZS 441, variants

Features/Options
- Indicator lamps for various voltages are indicated in chapter accessories in the appendix
- Indicator lamp position in the left side cable entry, other positions possible on request

// Push-button release VD

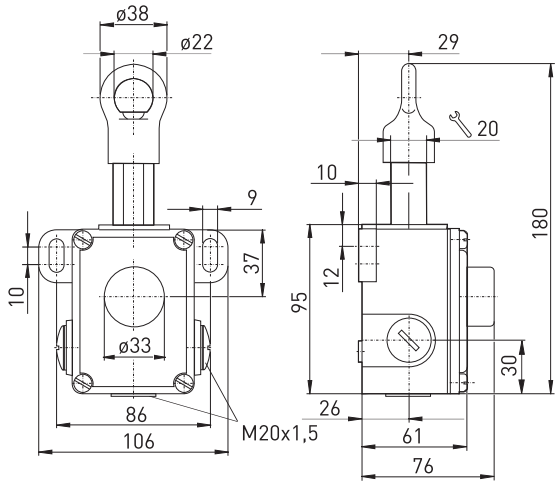

Push-button release	Order Number
ZS 441 1Ö/1S VD/150 N	74141502
ZS 441 2Ö VD/150 N	74541502

// Key release VS

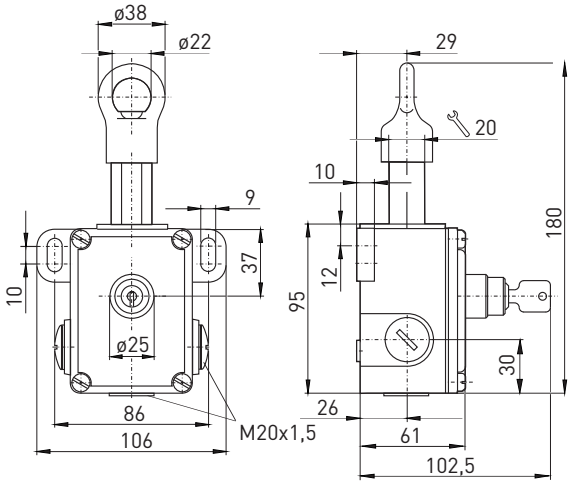

Key release	Order Number
ZS 441 1Ö/1S VS/150 N	74141602
ZS 441 2Ö VS/150 N	74541602

PRODUCTION PROCESS ASSEMBLY

MOUNTING OF THE PULL-WIRE UNIT AT EMERGENCY PULL-WIRE SWITCHES

Emergency pull-wire switches, one-side actuation
// Series ZS 80

Features/Options
- Metal enclosure
- 4 contacts
- Position indicator and integrated emergency-stop push button
- Wire length up to 100 m
- Pretensioning force 100 N
- Lever for release and position indication
- Watertight collar
- Wire pull and breakage detection
- Indicator lamp available for various voltages see chapter accessories in the appendix

// ZS 80

32

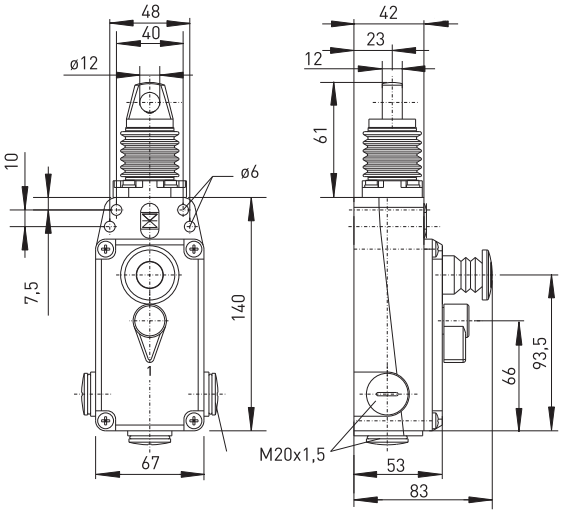

Technical data

Standards	IEC/EN 60947-5-1, IEC/EN 60947-5-5, EN 418, EN ISO 13849-1
Enclosure	aluminium die-cast, enamel finish
Cover	glass-fibre reinforced, shock-proof thermoplastic, ultramid
Degree of protection	IP 67 to IEC/EN 60529
Contact material	silver
Switching elements	2 NC/2 NO, 3 NC/1 NO or 4 NC contacts with double break
Switching system	slow action, positive break NC contacts ⊖
Connection	2 x 4-pole terminal block
Cable section	max. 2.5 mm² (incl. conductor ferrules)
Cable entry	3 x M20 x 1.5
B_{10d} (10 % load)	200 000
T_M	max. 20 years
U_{imp}	2.5 kV
U_i	250 V
I_{the}	2 A
Utilisation category	AC-15
I_e/U_e	2 A/250 VAC
Max. fuse rating	2 A gL/gG D-fuse
Ambient temperature	–25 °C ... +70 °C
Mech. life	> 100 000 operations
Indicator lamp	as option
Max. wire length	100 m
Features	wire pull and breakage detection
Approvals	

Contact variants: switch travel/contacts

	Snap action	Order No.
2 NC/2 NO contact	ZS 80 2Ö/2S WVD 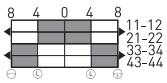	72942501
3 NC/1 NO contacts	ZS 80 3Ö/1S WVD 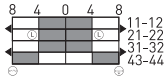	72942502
4 NC contacts	ZS 80 4Ö WVD 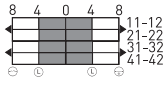	72942503

Ordering details ZS 80 2Ö/2S WVD-G

- Indicator lamp, position: left cable entry, various voltages possible, see accessories (appendix)
- VD lever release
- W watertight collar
- 2 NC/2 NO contacts (3Ö/1S, 4Ö)
- Series
- Emergency pull-wire switch

At 5 m distance intermediate wire supports are required. One wire thimble is provided. Details related to pre-stress and actuating forces are indicated on page 13.

Emergency pull-wire switches, one-side actuation
// Series ZS 80, mounting

Legend

1 Cable tensioner system TS 65	04.71.7101
2 Eye bolt M8 x 70 with nut	04.00.7112
3 Wire clamp	01.10.0003
4 Wire thimble 3B	01.10.0001
5 Tension spring ZS 80	04.00.7156
6 Pull-wire per metre	01.09.0011

// Mounting without tension spring

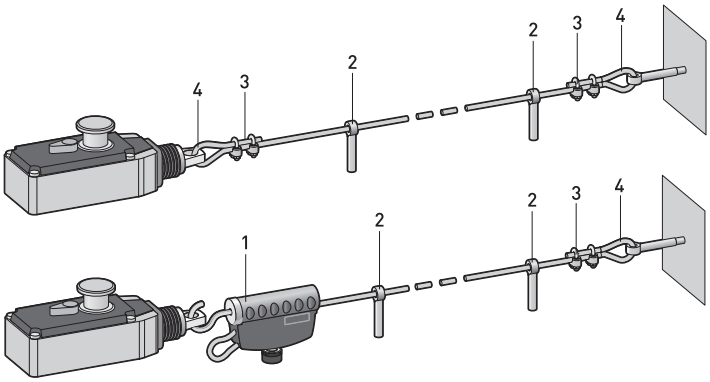

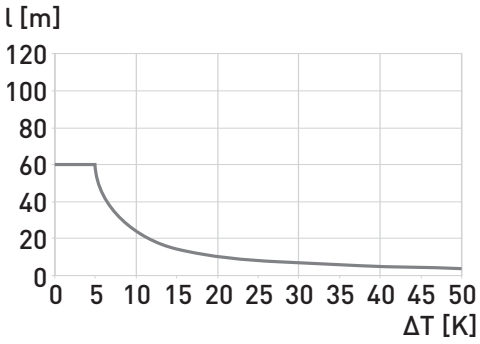

// Mounting with tension spring

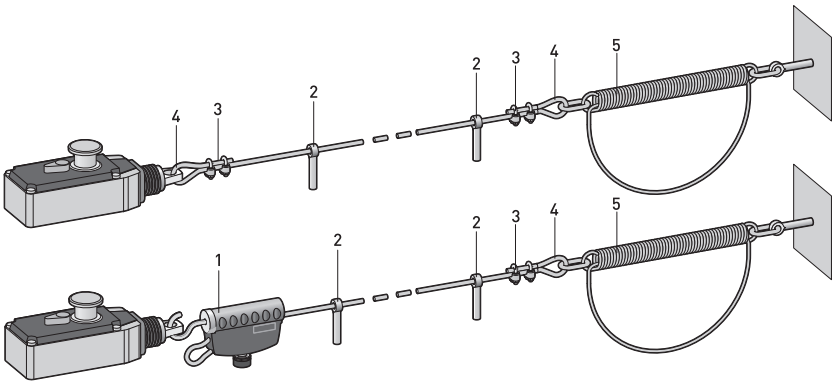

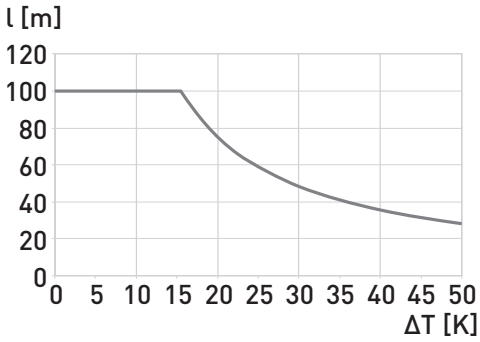

// Mounting with 2 emergency pull-wire switches

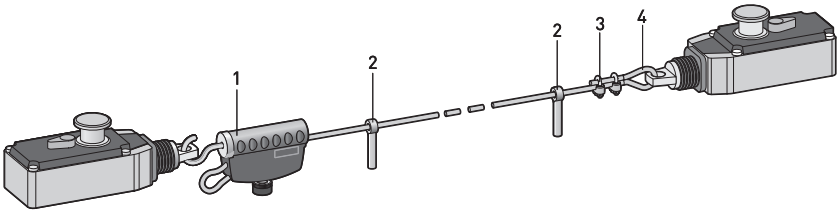

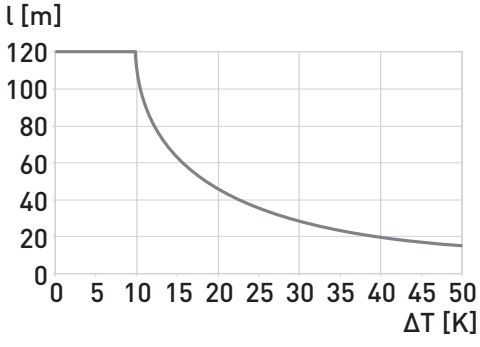

Emergency pull-wire switches, two-side actuation
// Series ZS 73 S

Features/Options
- Metal enclosure
- 2 contacts
- Wire length up to 2 x 100 m
- Release by push button or key possible
- Available without unlocking mechanism (per DIN EN 60947-5-1)
- Wire pull and breakage detection
- Ex version available

// ZS 73 S

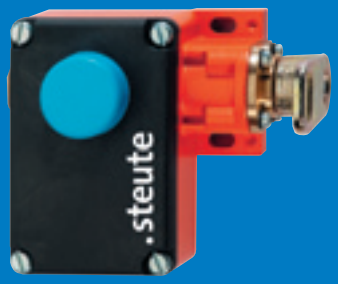

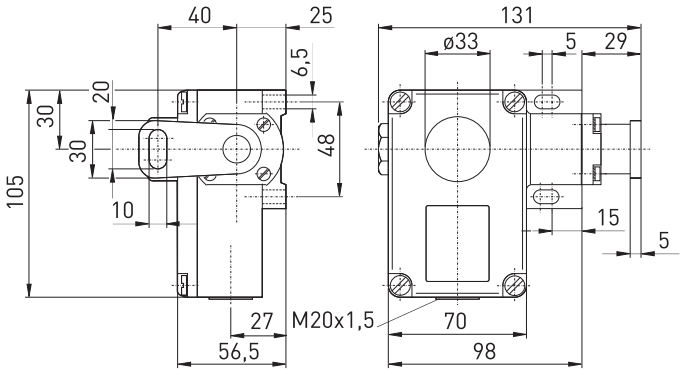

Technical data

Standards	IEC/EN 60947-5-1, IEC/EN 60947-5-5, EN 418, EN ISO 13849-1
Enclosure	aluminium die-cast, enamel finish; ZS 73 NIRO: aluminium die-cast, hard-coated and enamelled
Cover	glass-fibre reinforced, shock-proof thermoplastic, ultramid
Degree of protection	ZS 73 S VD: IP 65; ZS 73 S VS: IP 54 to IEC/EN 60529
Contact material	silver
Switching elements	change-over contact with double break or 2 NC contacts
Switching system	snap action, positive break NC contacts ⊖
Connection	screw terminals
Cable section	max. 2.5 mm² (incl. conductor ferrules)
Cable entry	2 x M20 x 1.5
B_{10d} (10 % load)	200 000
T_M	max. 20 years
U_{imp}	6 kV
U_i	400 V
I_{the}	6 A
Utilisation category	AC-15
I_e/U_e	6 A/400 VAC
Max. fuse rating	6 A gL/gG D-fuse
Ambient temperature	–25 °C ... +70 °C
Mech. life	> 100 000 operations
Indicator lamp	as option
Max. wire length	2 x 100 m
Features	wire pull and breakage detection
Approvals	

Contact variants: switch travel/contacts

	Snap action
1 NC/1 NO contact	**ZS 73 S 1Ö/1S** 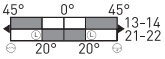
2 NC contacts	**ZS 73 S 2Ö** 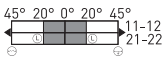

Ordering details ZS 73 S 1Ö/1S VD-NIRO-G

- Indicator lamp, accessories (appendix)
- NIRO pull-wire unit
- VD push button release (VS key release, blank without manual latching))
- 1 NC/1 NO contact (2Ö)
- S two-side actuation
- Series
- Emergency pull-wire switch

At 4 m distance intermediate wire supports are required. Two tension springs type ZS 73/75 S must be installed see chapter accessories in the appendix.

Emergency pull-wire switches, two-side actuation
// Series ZS 73 S, mounting

Legend

1 Cable tensioner system TS 65	04.71.7101
2 Eye bolt M8 x 70 with nut	04.00.7112
3 Wire clamp	01.10.0003
4 Wire thimble 3B	01.10.0001
5 Tension spring ZS 73/75 S	04.00.7158
6 Pull-wire per metre	01.09.0011

Note
- Always mount emergency pull-wire switch in middle position.

// Mounting with tension spring

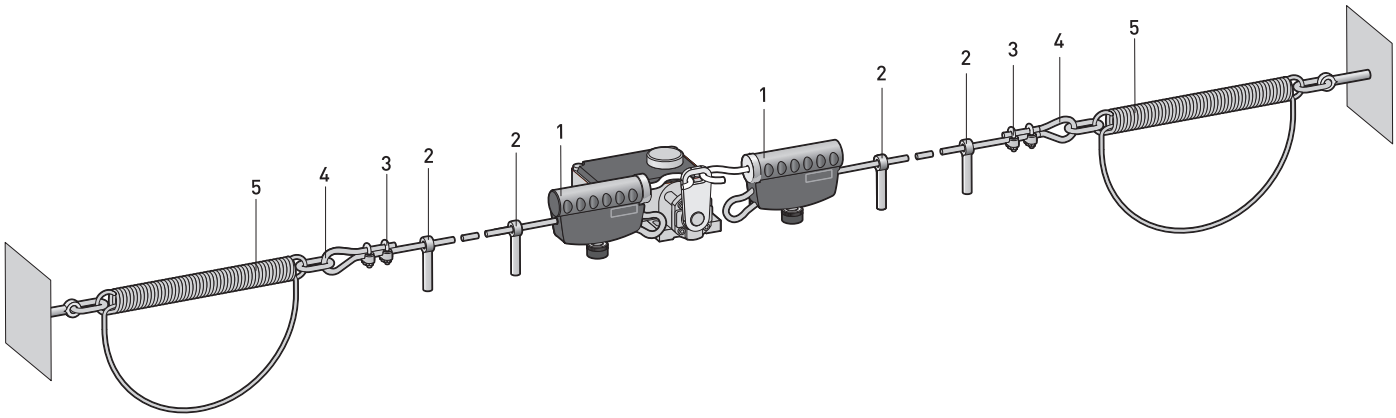

Emergency pull-wire switches, two-side actuation
// Series ZS 73 S, variants

Features/Options
- Indicator lamps for various voltages are indicated in chapter accessories in the appendix
- Indicator lamp position in the left side cable entry, other positions possible on request
- With 2 cable entries available on request

// Push-button release VD

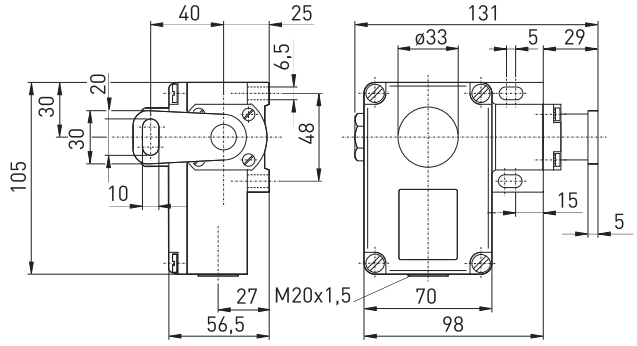

Push-button release	Order Number
ZS 73 S 1Ö/1S VD	73130501
ZS 73 S 2Ö VD	73530501

// Stainless Steel ZS 73 S NIRO

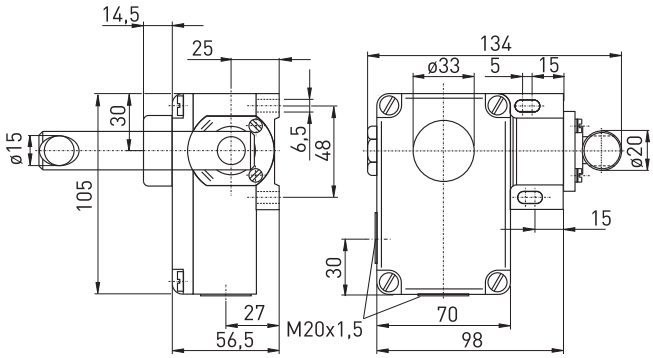

Features/Options
- ZS 73 NIRO: pull-wire lever and screws made of stainless steel 1.4305, hard-coated enclosure with enamel finish

Stainless Steel/Push-button release	Order Number
ZS 73 S 1Ö/1S VD Niro	73130902

// Key release VS

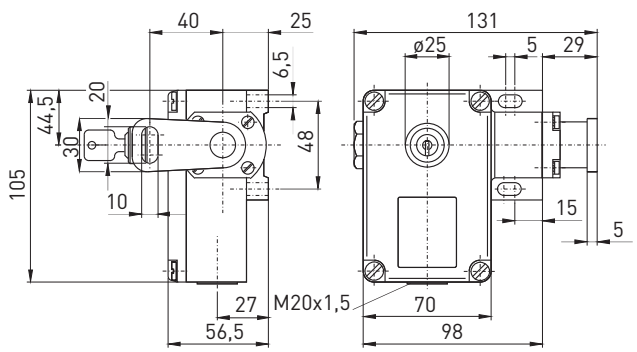

Key release	Order Number
ZS 73 S 1Ö/1S VS	on request

SHOCK TEST OF AN EMERGENCY PULL-WIRE SWITCH

Emergency pull-wire switches, two-side actuation
// Series ZS 75 S

Features/Options
- Metal enclosure
- 2 or 4 contacts
- Wire length up to 2 x 100 m
- Release by push button or key possible
- Available without unlocking mechanism (per DIN EN 60947-5-1)
- Wire pull and breakage detection
- Version with Dupline or Dupline Safe available
- Ex version available

// ZS 75 S

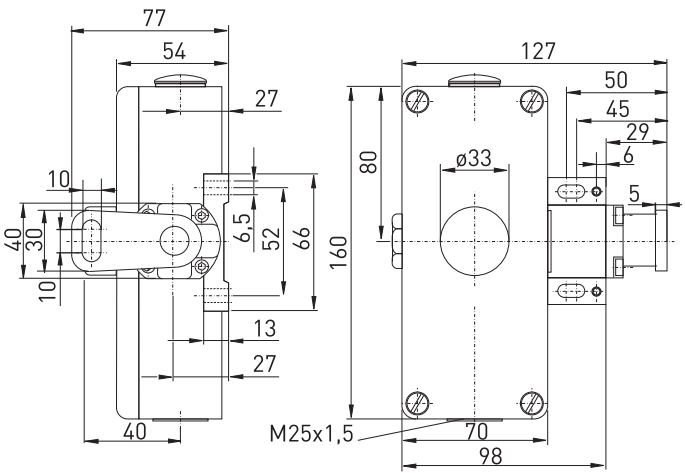

Technical data

Standards	IEC/EN 60947-5-1, IEC/EN 60947-5-5, EN 418, EN ISO 13849-1
Enclosure	aluminium die-cast, enamel finish
Cover	aluminium die-cast, enamel finish
Degree of protection	ZS 75 S VD: IP 65; ZS 75 S VS: IP 54 to IEC/EN 60529
Contact material	silver
Switching elements	change-over contact with double break or 2 NO/2 NC or 4 NC contacts
Switching system	snap action, positive break NC contacts ⊖
Connection	screw terminals
Cable section	max. 2.5 mm² (incl. conductor ferrules)
Cable entry	2 x M25 x 1.5
B_{10d} (10 % load)	200 000
T_M	max. 20 years
U_{imp}	6 kV
U_i	400 V
I_{the}	6 A
Utilisation category	AC-15
I_e/U_e	6 A/400 VAC
Max. fuse rating	6 A gL/gG D-fuse
Ambient temperature	–25 °C ... +70 °C
Mech. life	> 100 000 operations
Indicator lamp	as option
Max. wire length	2 x 100 m
Features	wire pull and breakage detection
Approvals	

Contact variants: switch travel/contacts

	Snap action
1 NC/1 NO contact	ZS 75 S 1Ö/1S 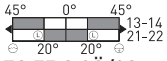
2 NC/2 NO contacts	ZS 75 S 2Ö/2S 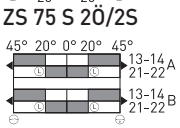
4 NC contacts	ZS 75 S 4Ö 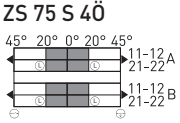

Ordering details

ZS 75 S 2Ö/2S VD-G-DP

- Dupline (DPS Dupline Safe)
- Indicator lamp, accessories (appendix)
- VD push button release (VS key release)
- 2 NC/2 NO contacts (1Ö/1S, 4Ö)
- S two-side actuation
- Series
- Emergency pull-wire switch

At 4 m distance intermediate wire supports are required. Two tension springs type ZS 73/75 S must be installed see chapter accessories in the appendix.

Emergency pull-wire switches, two-side actuation
// Series ZS 75 S, mounting

Legend

1 Cable tensioner system TS 65	04.71.7101
2 Eye bolt M8 x 70 with nut	04.00.7112
3 Wire clamp	01.10.0003
4 Wire thimble 3B	01.10.0001
5 Tension spring ZS 73/75 S	04.00.7158
6 Pull-wire per metre	01.09.0011

Note
- Always mount emergency pull-wire switch in middle position.

// Mounting with tension spring

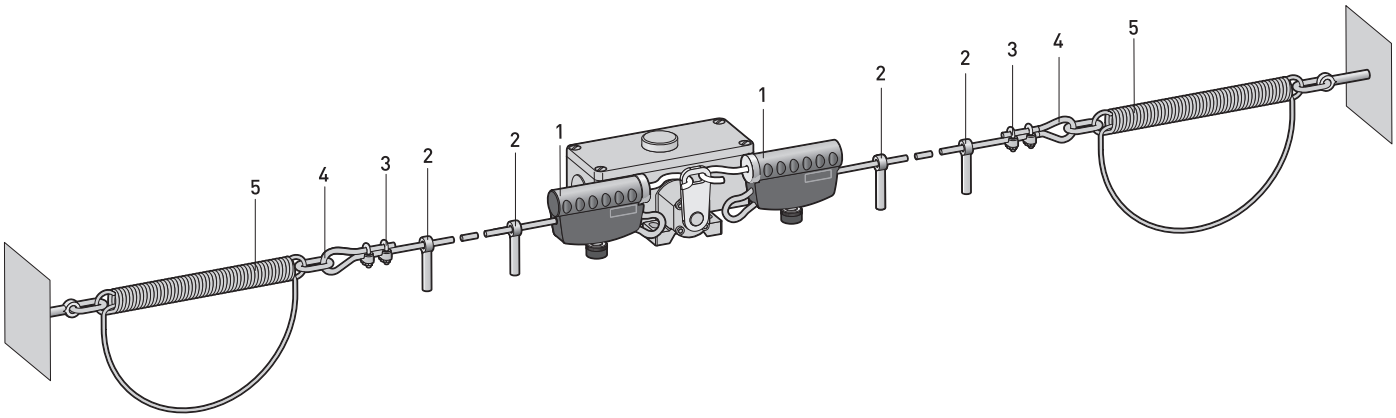

Emergency pull-wire switches, two-side actuation
// Series ZS 75 S, variants

Features/Options
- Indicator lamps for various voltages are indicated in chapter accessories in the appendix
- Indicator lamp position in the left side cable entry, other positions possible on request

// ZS 75 S

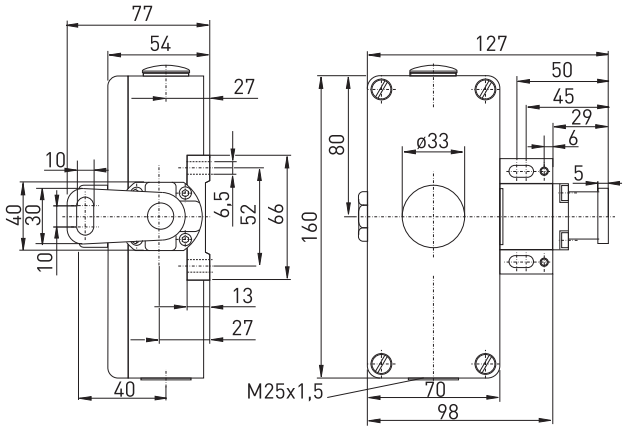

Order Number
ZS 75 S 1Ö/1S VD order No. 75130501

ZS 75 S 2Ö/2S VD order No. 75430503

ZS 75 S 4Ö VD order No. 75930501

// Key release VS

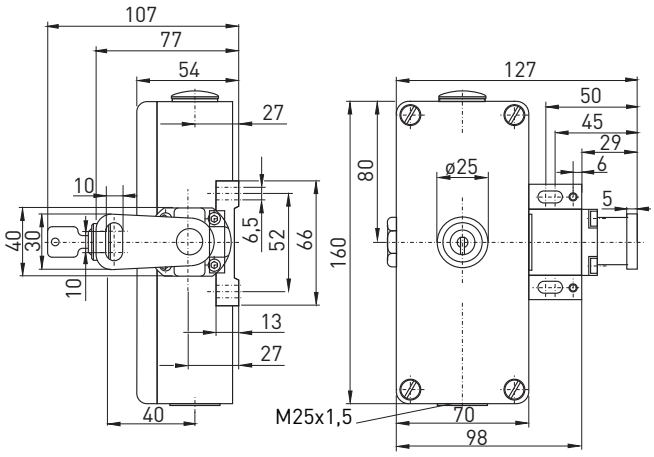

Order Number
ZS 75 S 1Ö/1S VS order No. 75130601

ZS 75 S 2Ö/2S VS order No. 75430603

// Pull-ring release VZ

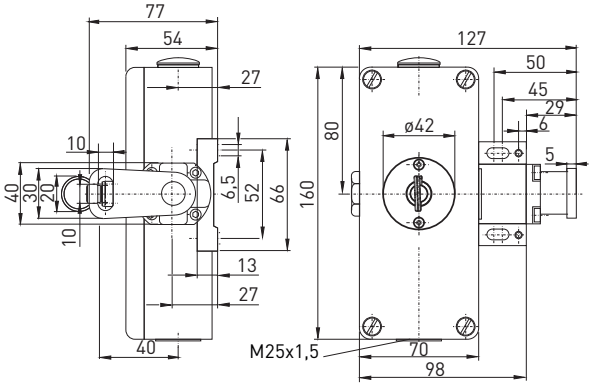

Order Number
ZS 75 S 2Ö/2S VZ order No. 75430922

LIFE TEST OF UNLOCKING MECHANISM

Emergency pull-wire switches, two-side actuation
// Series ZS 90 S

Features/Options
- Thermoplastic enclosure
- 4 contacts
- Wire length up to 2 x 50 m
- Release by lever possible
- Available without unlocking mechanism (per DIN EN 60947-5-1)
- Wire pull and breakage detection
- Version with Dupline or Dupline Safe available
- Ex version available

// ZS 90 S

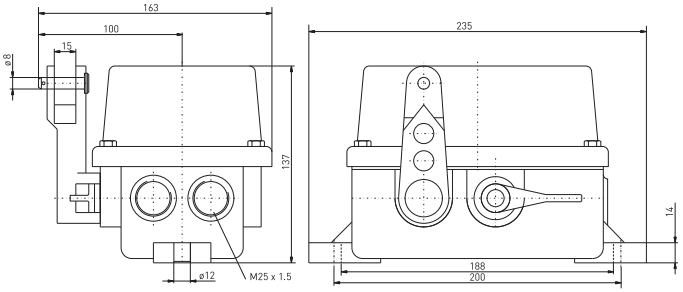

Technical data

Standards	IEC/EN 60947-5-1, IEC/EN 60947-5-5, EN 418 EN ISO 13849-1
Enclosure	Duroplast, UV resistant to EN ISO 4892
Cover	Duroplast, UV resistant to EN ISO 4892
Protection class	IP 67 to IEC 60529
Contact material	silver
Switching elements	2 NO/2 NC with double break
Schaltsystem	snap action, positive break NC contacts ⊖
Termination	screw terminals
Cable section	max. 2.5 mm^2 (incl. conductor ferrules)
Cable entry	2 x M25 x 1.5
B_{10d} (10% Nennlast)	200 000
T_M	max. 20 years
U_{imp}	4 kV
U_i	400 V
I_{the}	10 A
Utilisation category	AC-15
I_e/U_e	1 A/230 VAC
Max. fuse rating	6 A gG D fuse
Ambient temperature	–40 °C ... +85 °C
Mech. life	> 100 000 operations
Max. wire length	2 x 50 m
Features	wire pull and breakage detection

Contact variants: switch travel/contacts

	Snap action	Order No.
2 NC/2 NO contacts	ZS 90 S 2Ö/2S 3 4 1 2 3 4 1 2	76430501

Ordering example ZS 90 S 2Ö/2S VD-DP

- DP Dupline (DPS Dupline Safe)
- VD lever release (blank without manual latching)
- 2 NC/2 NO contacts
- S two-side actuation
- Series
- Emergency pull-wire switch

At 4 m distance intermediate wire supports are required. Two tension springs type RZ 130K must be installed see chapter accessories in the appendix.

Emergency pull-wire switches, two-side actuation
// Series ZS 90 S, mounting

Legend

1 Cable tensioner system TS 65	04.71.7101
2 Eye bolt M8 x 70 with nut	04.00.7112
3 Wire clamp	01.10.0003
4 Wire thimble 3B	01.10.0001
5 Tension spring RZ-130K	04.76.7101
6 Pull-wire per metre	01.09.0011

Note
- Always mount emergency pull-wire switch in middle position.

// Mounting with tension spring

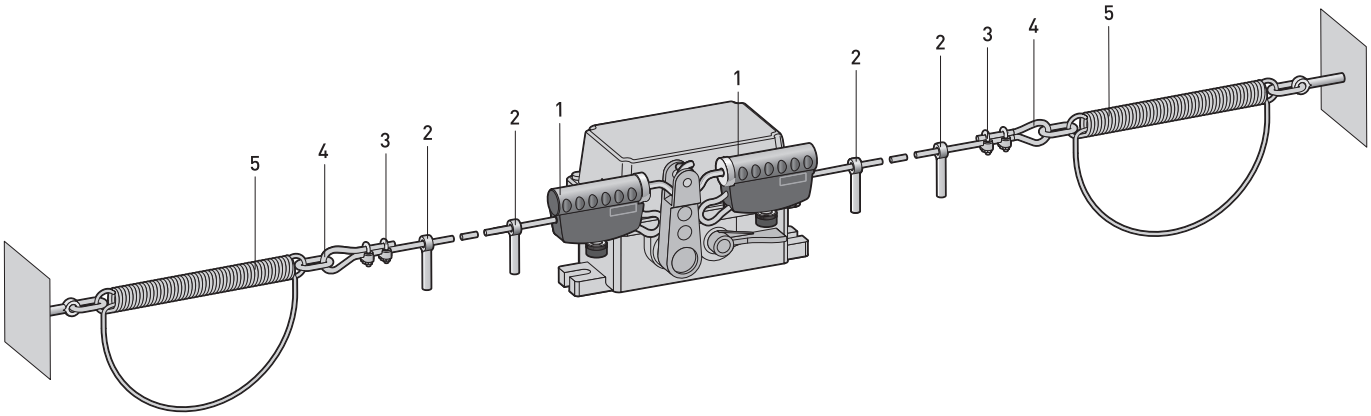

.steute

Belt-alignment switches

// Series ES 61 SR
from page 48
// Series ZS 73 SR
from page 50
// Series ZS 75 SR
from page 52
// Series ZS 90 SR
from page 54

ZS 73 SR

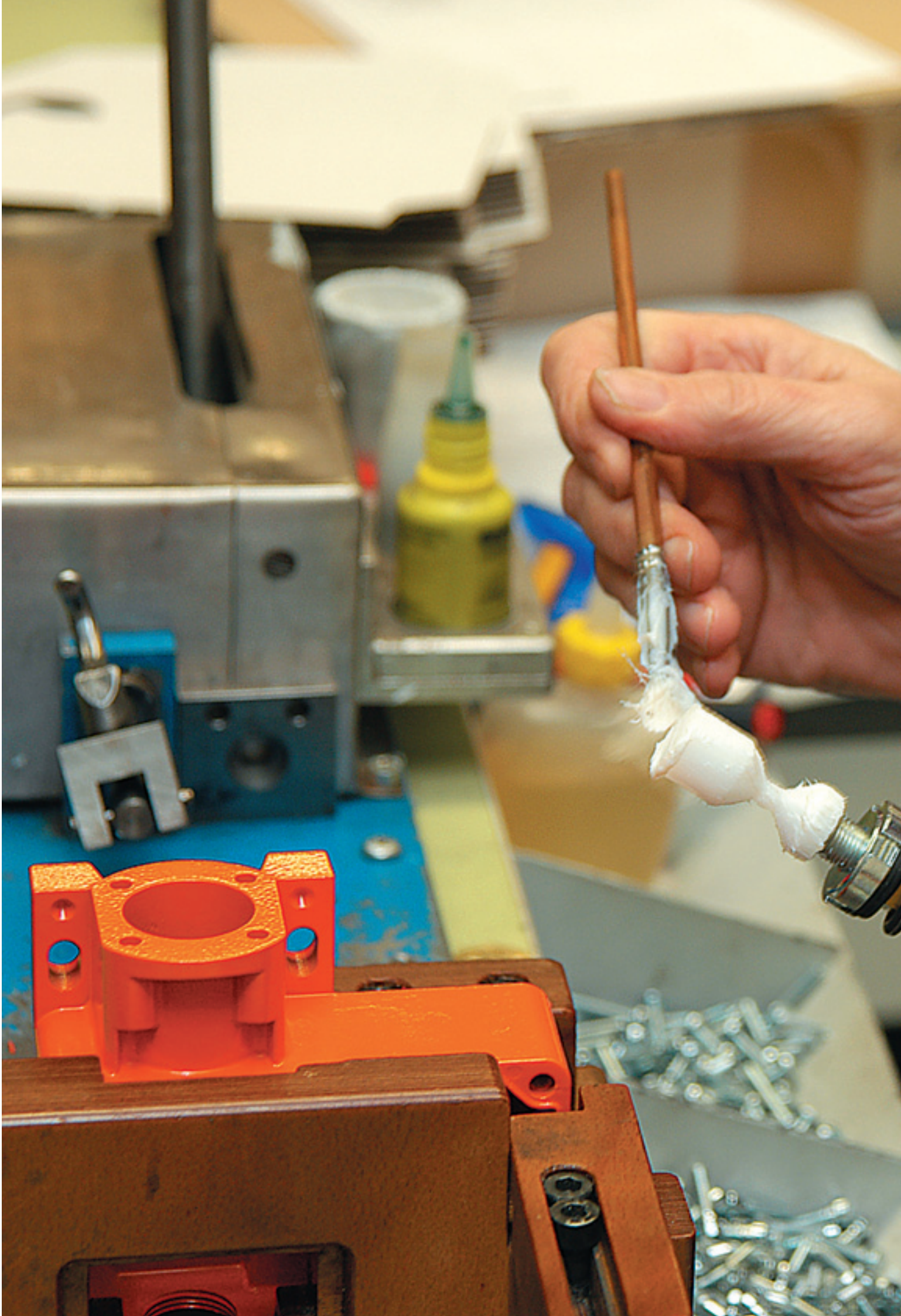

Belt-alignment switches

Application

Belt-alignment switches are suitable for applications with handling equipment. Here they are installed e.g. at both sides of a conveyor belt in order to monitor the misalignment of the belt.

Belt misalignment, evoked by for example not in the middle of conveyor belt positioned goods or pollution of track idlers and deflection pulleys, can lead without any monitoring measurements to damage, destruction, material covering and dropping.

Design and mode of operation

Belt-alignment switches are actuated when the conveyor belt becomes misaligned. Depending on the plant arrangements, this signal can either be used to switch the equipment off or to provide automatic correction of the belt alignment. Thus they should be installed at both sides of the conveyor belt close to the deflection and drive pulleys. In case of very long conveyor systems further belt-alignment switches must be installed. Those are actuated with the misalignment of the conveyor belt. This signal can either switch the system off or start an automatic belt position correction, as well as at the same time generate an optical or acoustic indicating or warning signal.

All Belt-alignment switches have positive break NC contacts and those of series ZS also have a mechanical latching. At actuation the NC contacts are opened and latched mechanically. The release can either be carried by push button or key. Thus an unintentional, automatic restart of the conveyor belt is prevented.

All belt-alignment switches bear the CE mark according to the Machinery Directive 2006/42/EC.

Application

Monitoring an conveyor belt

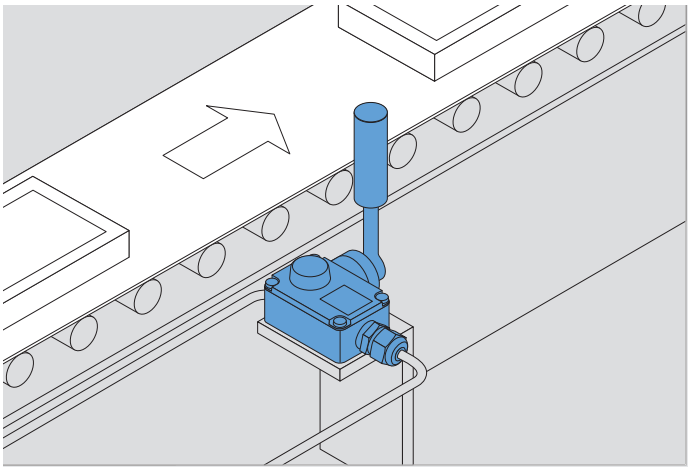

Belt-alignment switch in actuated state

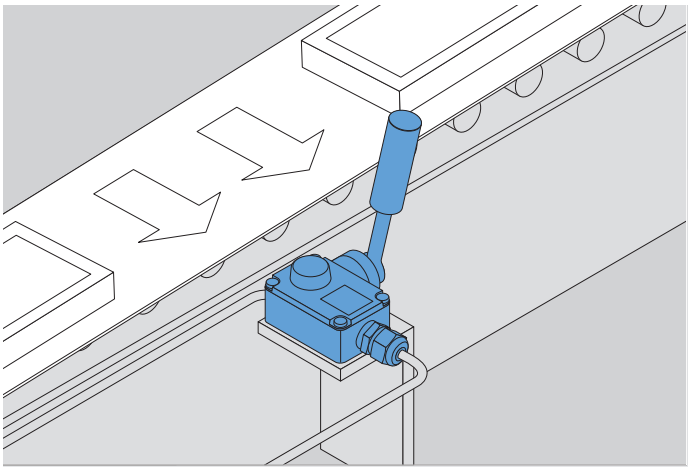

Belt-alignment switches
// Series ES 61 SR

Features/Options
- Metal enclosure
- Slow action: 2 contacts

// ES 61 SR

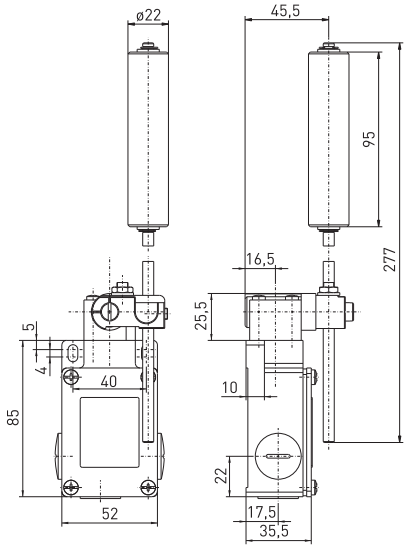

Technical data

Standards	IEC/EN 60947-5-1, EN ISO 13849-1
Enclosure	aluminium die-cast, enamel finish
Cover	steel, enamel finish
Degree of protection	IP 65
Contact material	silver
Switching elements	change-over contact with double break with galvanically separated contact bridges
Switching system	slow action
Connection	M3.5 screw terminals
Cable section	max. 2.5 mm² (incl. conductor ferrules)
Cable entry	3 x M20 x 1.5
B_{10d} (10 % load)	1 million
T_M	10 years
U_{imp}	6 kV
U_i	400 V
I_{the}	10 A
Utilisation category	AC-15
I_e/U_e	6 A/400 VAC
Max. fuse rating	6 A gL/gG D-fuse
Ambient temperature	–20 °C ... +80 °C
Mech. life	> 1 million operations
Switching frequency	3600/h
Approvals	

Contact variants: switch travel/contacts

	Slow action	Order Number
1 NC/1 NO contact	**ES 61 SR 1Ö/1S** 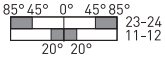	**61031001**
1 NC/1 NO contact with overlapping	**ES 61 SR UE** 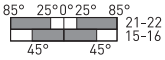	**61231001**

Ordering details ES 61 SR 1Ö/1S

- 1 NC/1 NO contact, (UE 1 NC/1 NO contact with contact overlapping)
- SR Belt-alignment lever
- Series
- S Slow action (M snap action)

PRODUCTION PROCESS ASSEMBLY
MOUNTING OF ACTUATOR

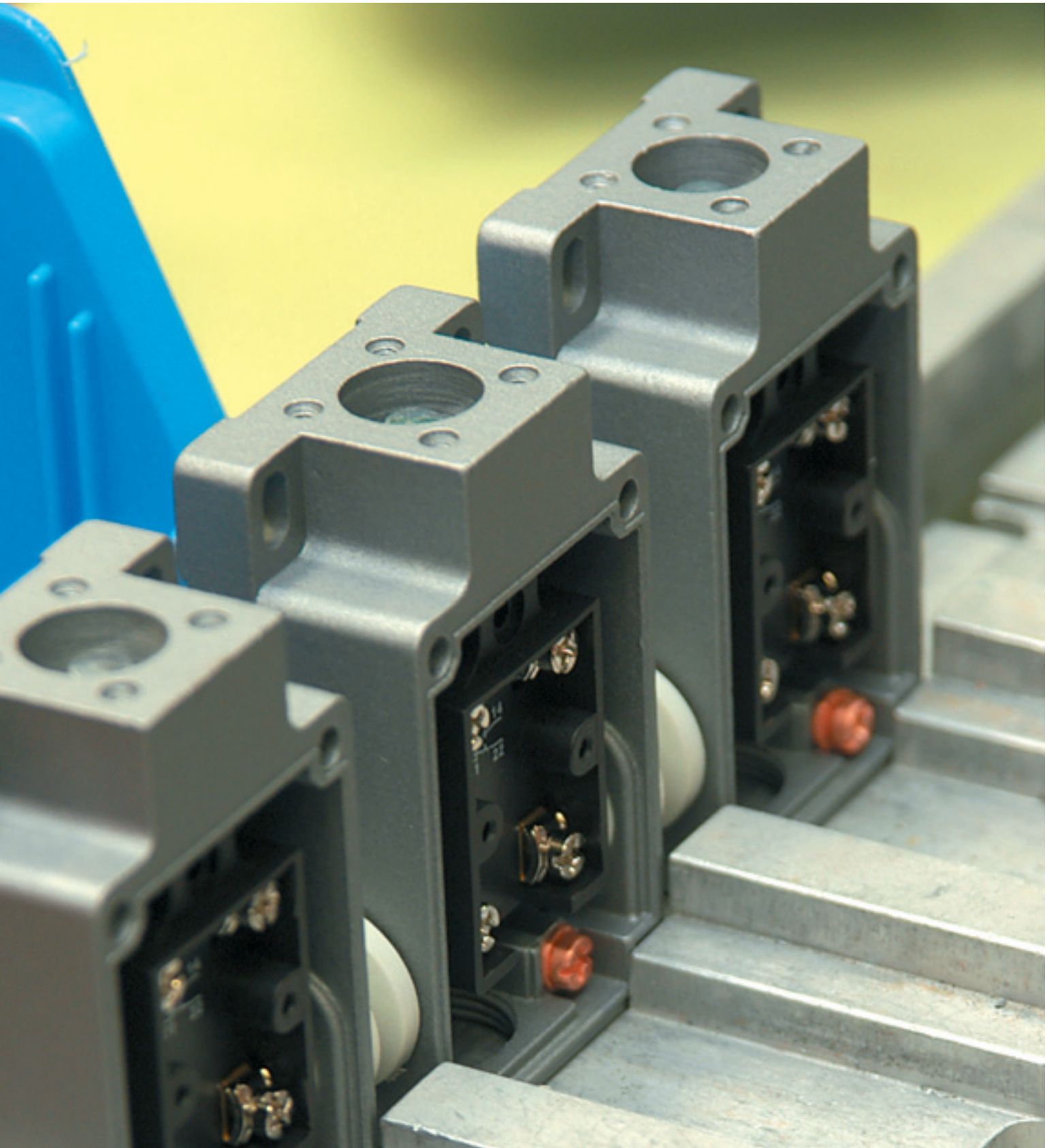

Belt-alignment switches
// Series ZS 73 SR

Features/Options
- Metal enclosure
- 2 contacts
- Release by push button or key possible
- Belt-alignment roller made of stainless steel 1.4104
- Ex version available

// ZS 73 SR

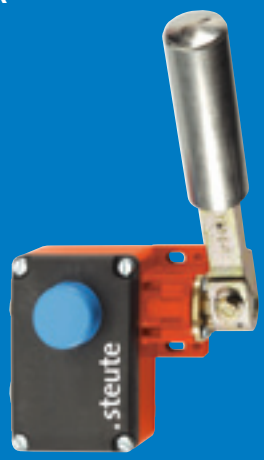

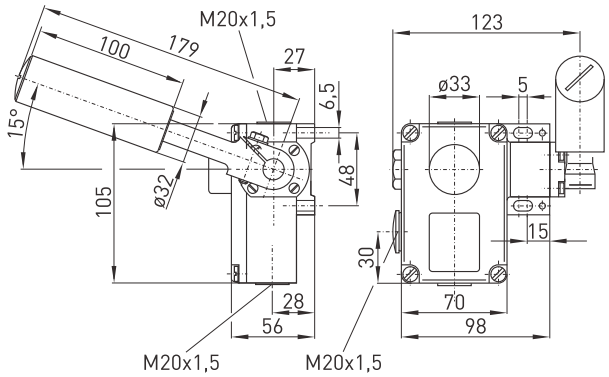

Technical data

Standards	IEC/EN 60947-5-1, EN ISO 13849-1
Enclosure	aluminium die-cast, enamel finish;
Cover	glass-fibre reinforced, shockproof thermoplastic, ultramid
Degree of protection	ZS 73 SR VD: IP 65; ZS 73 SR VS: IP 54 to IEC/EN 60529
Contact material	silver
Switching elements	change-over contact with double break or 2 NC contacts
Switching system	snap action, positive break NC contacts ⊖
Connection	screw terminals
Cable section	max. 2.5 mm² (incl. conductor ferrules)
Cable entry	2 x M20 x 1.5
B_{10d} (10 % load)	ZS 73 SR: 2 million; ZS 73 SR VD/VS: 200 000
T_M	max. 20 years
U_{imp}	6 kV
U_i	400 V
I_{the}	6 A
Utilisation category	AC-15
I_e/U_e	6 A/400 VAC
Max. fuse rating	6 A gL/gG D-fuse
Ambient temperature	–25 °C ... +70 °C
Mech. life	ZS 73 SR: > 1 million operations ZS 73 SR VD/VS: > 100 000 operations
Indicator lamp	as option
Approvals	

Contact variants: switch travel/contacts

	Snap action
1 NC/1 NO contact	ZS 73 SR 1Ö/1S 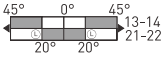
2 NC contacts	ZS 73 SR 2Ö 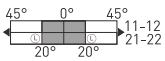

Ordering details ZS 73 SR 1Ö/1S VD-G

Indicator lamp, see accessories (appendix)
VD Push button release
(VS key release, blank without manual latching)
1 NC/1 NO contact (2Ö)
SR Belt-alignment lever
Series
Belt-alignment switch

Features/Options
- Indicator lamps for various voltages are indicated in chapter accessories in the appendix
- Indicator lamp position in the left side cable entry, other positions possible on request
- With 2 cable entries available on request

// Push-button release VD

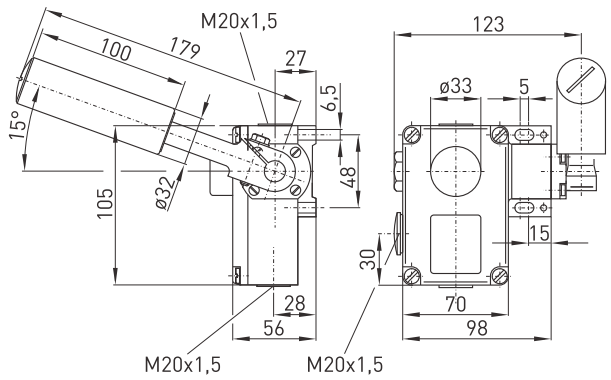

Push-button release	Order Number
ZS 73 SR 1Ö/1S VD	73131501
Without release	Order Number
ZS 73 SR 1Ö/1S	73131001

// Key release VS

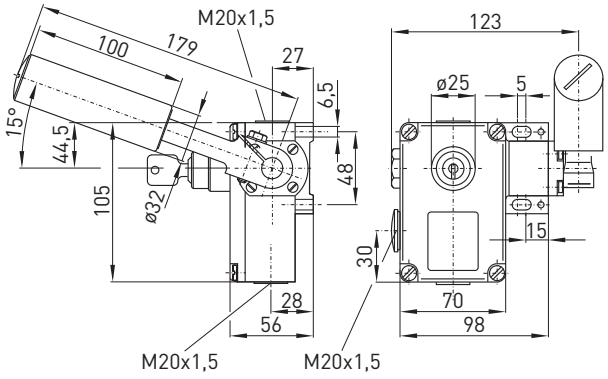

Key release	Order Number
ZS 73 SR 1Ö/1S VS	on request

Belt-alignment switches
// Series ZS 75 SR

Features/Options
- Metal enclosure
- 2 or 4 contacts
- Release by push button or key possible
- Belt-alignment roller made of stainless steel 1.4104
- Version with Dupline or Dupline Safe available
- Ex version available

// ZS 75 SR

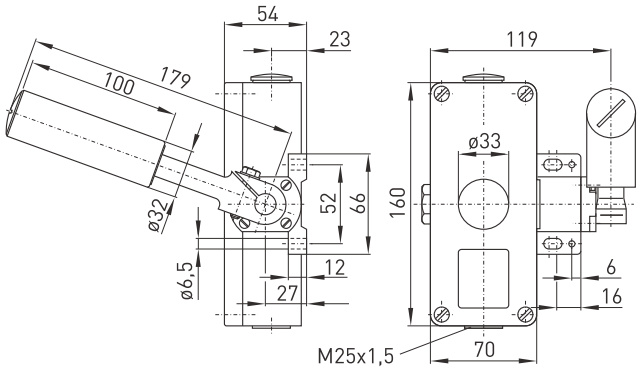

Technical data

Standards	IEC/EN 60947-5-1, EN ISO 13849-1
Enclosure	aluminium die-cast, enamel finish
Cover	aluminium die-cast, enamel finish
Degree of protection	ZS 75 SR VD: IP 65; ZS 75 SR VS: IP 54 to IEC/EN 60529
Contact material	silver
Switching elements	change-over contact with double break or 2 NO and 2 NC or 4 NC
Switching system	snap action, positive break NC contacts ⊖
Connection	screw terminals
Cable section	max. 2.5 mm² (incl. conductor ferrules)
Cable entry	2 x M25 x 1.5
B_{10d} (10 % load)	ZS 75 SR: 2 million; ZS 75 SR VD/VS: 200 000
T_M	max. 20 years
U_{imp}	6 kV
U_i	400 V
I_{the}	6 A
Utilisation category	AC-15
I_e/U_e	6 A/400 VAC
Max. fuse rating	6 A gL/gG D-fuse
Ambient temperature	–25 °C ... +70 °C
Mech. life	ZS 75 SR: > 1 million operations ZS 75 SR VD/VS: > 100 000 operations
Indicator lamp	as option
Approvals	

Contact variants: switch travel/contacts

	Snap action
1 NC/1 NO contact	**ZS 75 SR 1Ö/1S** 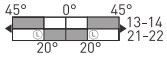
2 NC/2 NO contacts	**ZS 75 SR 2Ö/2S** 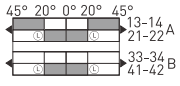
4 NC contacts	**ZS 75 SR 4Ö** 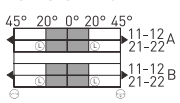

Ordering details **ZS 75 SR 2Ö/2S VD-G-DP**

- DP Dupline (DPS Dupline Safe)
- Indicator lamp, see accessories (appendix)
- VD Push button release (VS key release, blank without manual latching)
- 2 NC/2 NO contacts (1Ö/1S, 4Ö)
- SR Belt-alignment lever
- Series Belt-alignment switch

Belt-alignment switches
// Series ZS 75 SR, variants

Features/Options
- Indicator lamps for various voltages are indicated in chapter accessories in the appendix
- Indicator lamp position in the left side cable entry, other positions possible on request

// Push-button release VD

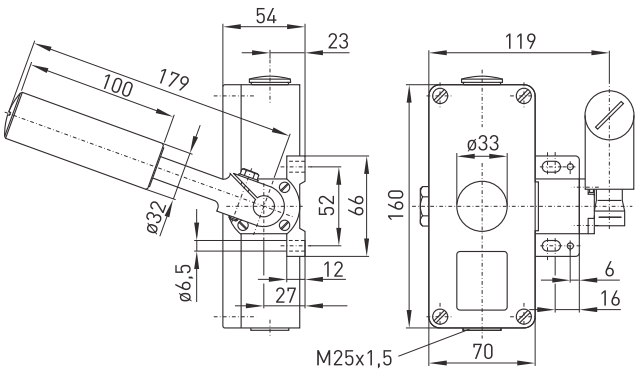

Without release	Order Number
ZS 75 SR 1Ö/1S	75131001
ZS 75 SR 2Ö/2S	75431002

Push-button release	Order Number
ZS 75 SR 1Ö/1S VD	75131501
ZS 75 SR 2Ö/2S VD	75431502

// Key release VS

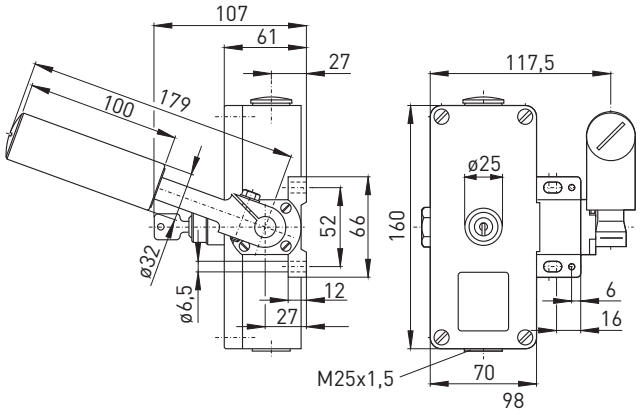

Key release	Order Number
ZS 75 SR 1Ö/1S VS	75131601
ZS 75 SR 2Ö/2S VS	75431602

Belt-alignment switches
// Series ZS 90 SR

Features/Options
- Thermoplastic enclosure
- 4 contacts with contact staggering:
  1 NC and 1 NO contact switching at 15°,
  1 NC and 1 NO contact switching at 25°
- Release by lever VD possible
- Belt-alignment lever continuously adjustable
- Version with Dupline or Dupline Safe available
- Ex version available

// ZS 90 SR

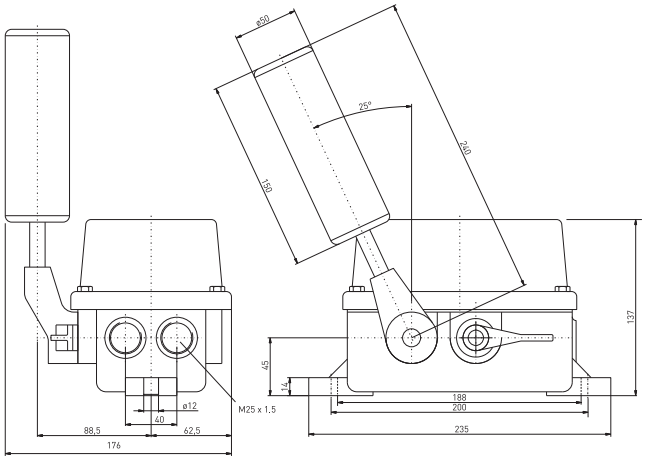

Technical data

Standards	IEC/EN 60947-5-1, IEC/EN 60947-5-5, EN 418 EN ISO 13849-1
Enclosure	Duroplast, UV resistant to EN ISO 4892
Cover	Duroplast, UV resistant to EN ISO 4892
Degree of protection	IP 67 to IEC 60529
Contact material	silver
Switching elements	2 NO/2 NC contacts with double break
Switching system	snap action, positive break NC contacts ⊖
Connection	screw terminals
Cable section	max. 2.5 mm^2 (incl. conductor ferrules)
Cable entry	2 x M25 x 1.5
B_{10d} (10 % load)	ZS 90 SR VD: 200 000, ZS 90 SR: 1 million
T_M	max. 20 years
U_{imp}	4 kV
U_i	400 V
I_{the}	10 A
Gebrauchskategorie	AC-15
I_e/U_e	1 A/230 VAC
Max. fuse rating	6 A gG D fuse
Ambient temperature	–40 °C ... +85 °C
Mech. life	ZS 90 SR VD: > 100 000 operations, ZS 90 SR: > 500 000 operations

Contact variants: switch travel/contacts

	Snap action	Order Number
2 NC/2 NO contacts	ZS 90 SR 1ÖS/1ÖS VD	76431501
	ZS 90 SR 1ÖS/1ÖS	76431001
	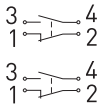	

Ordering example ZS 90 SR 1ÖS/1ÖS VD-DP

- DP Dupline (DPS Dupline Safe)
- VD lever release (blank without manual latching)
- 2 NC/2 NO contacts
- SR belt-alignment lever
- Series
- Belt-alignment switch

PRODUCTION PROCESS ASSEMBLY

ASSEMBLY OF PULL-WIRE SWITCH

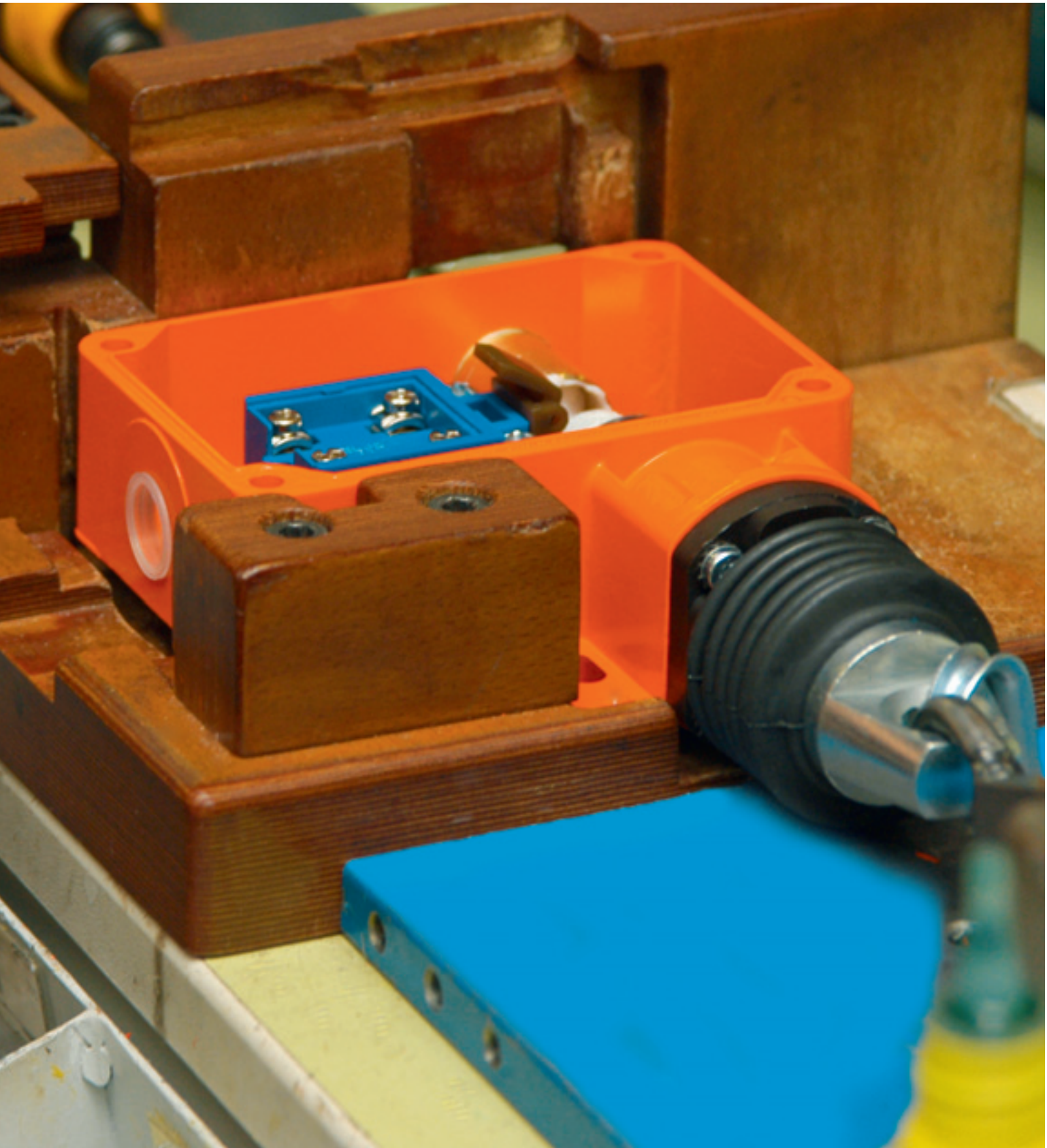

steute

Pull-wire switches

// Series ES/EM 95 Z
from page 62
// Series ES 51 Z
from page 64
// Series ES/EM 41 Z
from page 66
// Series ES/EM 61 Z
from page 70
// Series ZS 70
from page 72
// Series ZS 71
from page 73

ES 61 WZ

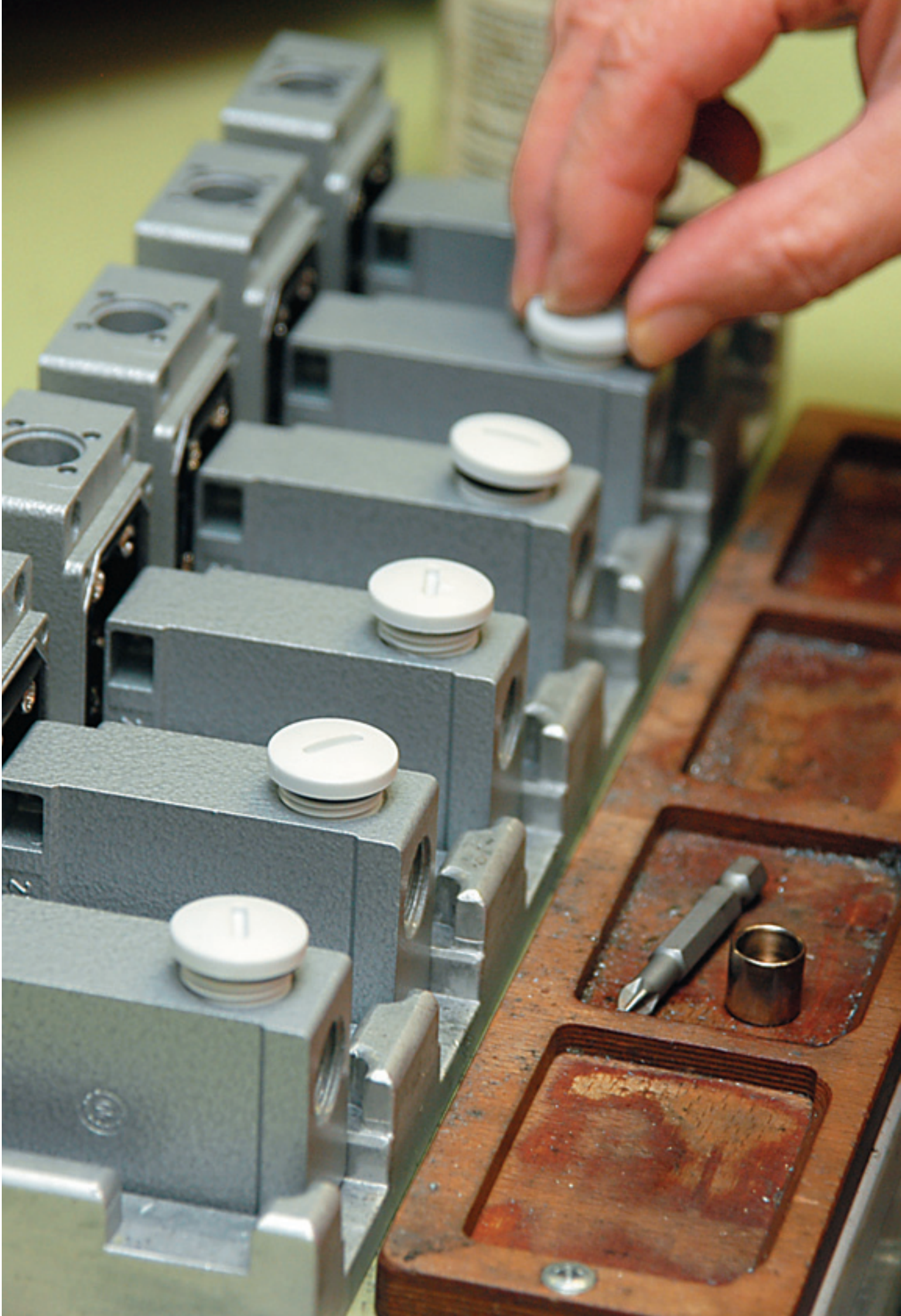

Pull-wire switches

Application

Pull-wire switches are suitable as transducers for starting machines or to open and close electrically-powered doors, gates and barriers.

Design and mode of operation

Pull-wire switches are actuated manually by pulling. There are variants with and without latching. The pull-wire switches without latching generate a switching impulse on actuation. With the devices with latching the switching impulse is maintained until repeated actuation.

An important feature for the selection of pull-wire switches are the mounting possibilities, wall or ceiling mounting. For your support you find a selection table on the following page.

In the appendix the mounting accessories for pull-wire switches can be selected.

All pull-wire switches presented in this chapter bear the CE mark according to the Low Voltage Directive 06/95/EC.

Application

Wall mounting as door opener

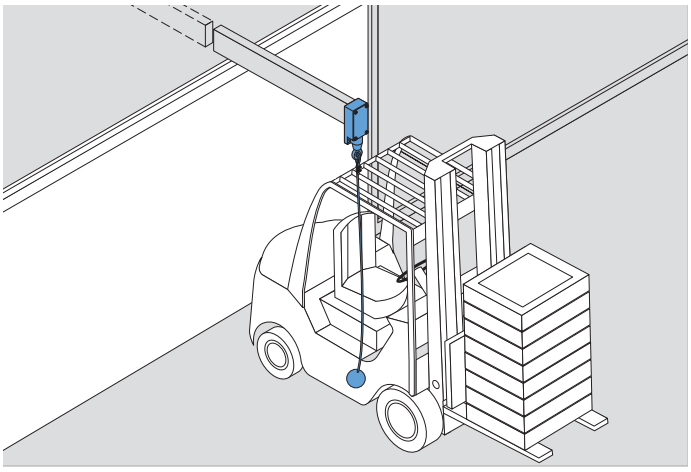

Ceiling mounting

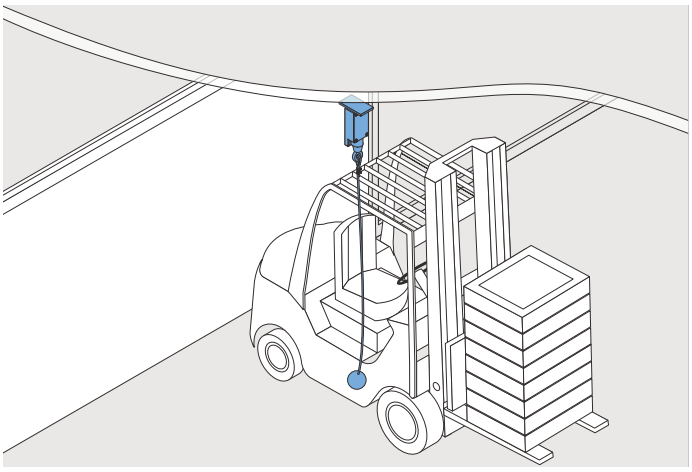

Selection table
Pull-wire switches

// Series		// Mounting possibilities		
		↓	↓	
ES/EM 95 Z, on page 62 - Thermoplastic enclosure - Ceiling or wall mounting	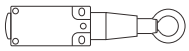	x	x	
ES 51 Z, on page 64 - Metal enclosure - Wall mounting	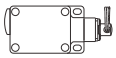	x	–	
ES/EM 41 Z, on page 66 - Metal enclosure - Ceiling or wall mounting	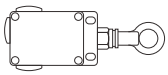	x	x	
ES/EM 61 Z, on page 70 - Metal enclosure - Ceiling or wall mounting	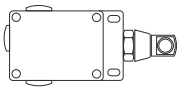	x	x	
ZS 70, on page 72 - Thermoplastic enclosure - Wall mounting	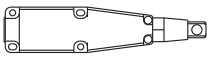	x	–	
ZS 71, on page 73 - Metal enclosure - Wall mounting	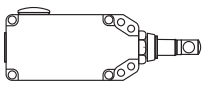	x	–	

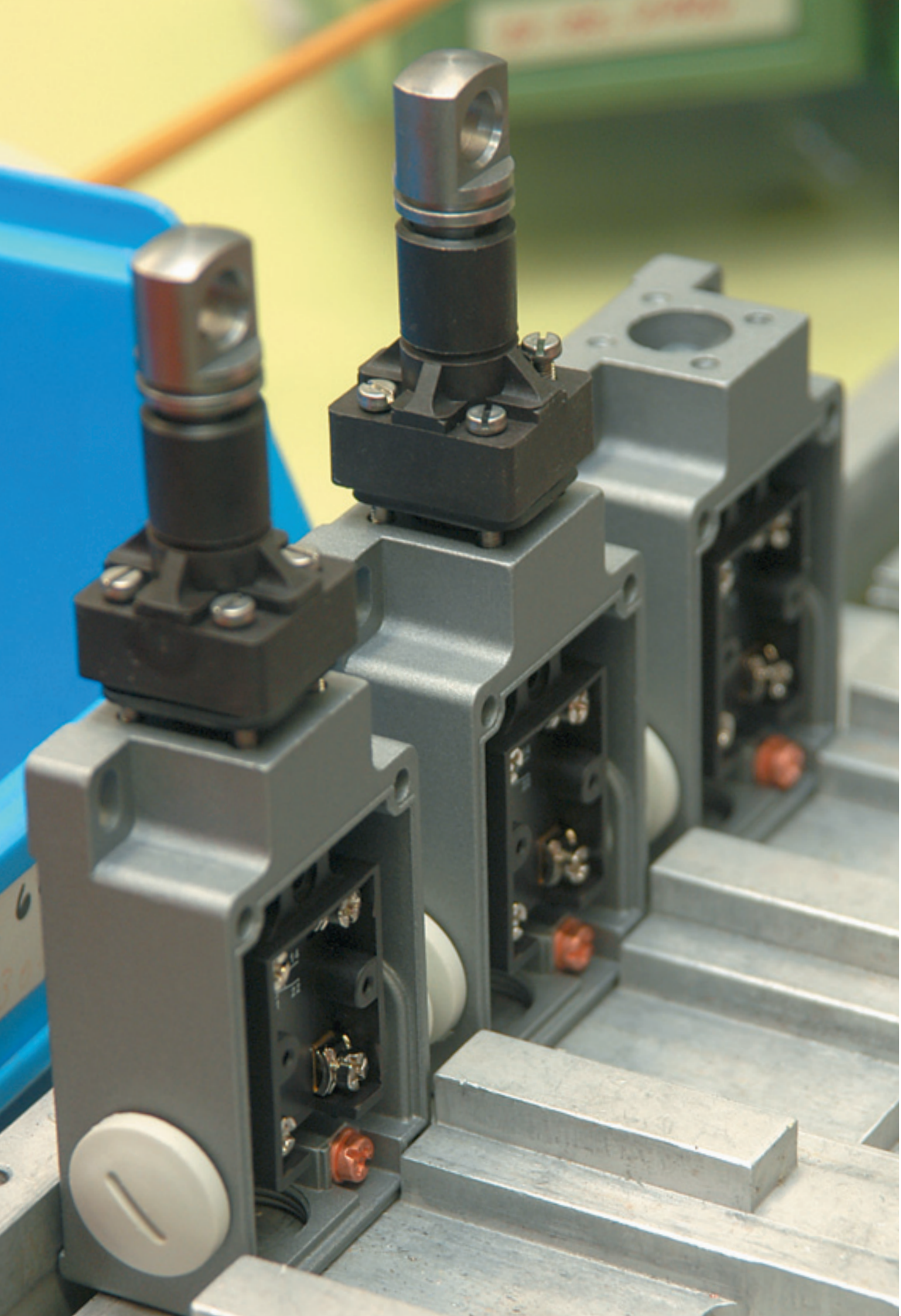

Pull-wire switches
// Series ES 95 Z

Features/Options
- Thermoplastic enclosure
- Wall mounting
- Slow action: 2 contacts
- Horizontal slotted mountig holes
- Double insulated ⧈

// ES 95 Z

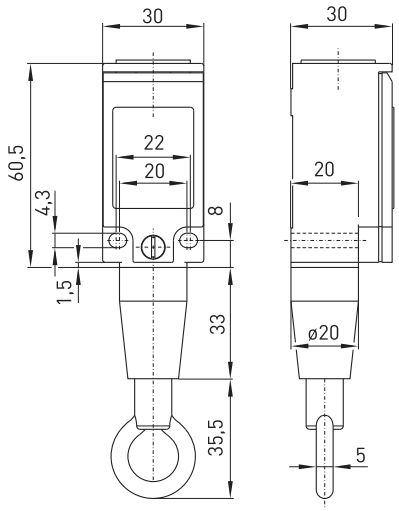

Technical data

Standards	IEC/EN 60947-5-1
Design	DIN EN 50 047
Enclosure	glass-fibre reinforced, shockproof thermoplastic, self-extinguishing UL 94-V0
Degree of protection	IP 67 to IEC/EN 60529
Contact material	silver
Switching elements	change-over contact with double break, galvanically separated contact bridges
Switching system	slow action, positive break NC contacts ⊖ to IEC 60947-5-1
Connection	screw terminals
Cable section	max. 2.5 mm^2 (incl. conductor ferrules)
Cable entry	1 x M20 x 1.5
U_{imp}	4 kV
U_i	400 V
I_{the}	6 A
Utilisation category	AC-15; DC-13
Ie/Ue	6 A/400 VAC; 0,25 A/230 VDC
Max. fuse rating	6 A gL/gG D-fuse
Mech. life	> 1 million operations
Switching frequency	1800/h
Ambient temperature	– 20 °C ... + 80 °C
Contact opening	2 x 3.5 mm
Actuating force	20 N
Features	pull-wire function
Approvals	

Contact variants: switch travel/contacts

	Slow action
1 NC/1 NO contact	ES 95 Z 1Ö/1S 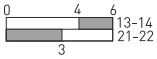

Ordering details ES 95 Z 1Ö/1S

- 1 NC/1 NO contact
- Z Actuator towing eye
- Series
- S Slow action

//ES 95 Z

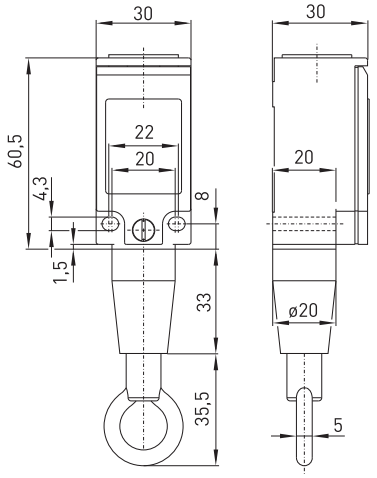

Slow action	Order Number
ES 95 Z 1Ö/1S	95041001
ES 95 Z 2S	95641001

// ES 95 WH/90° 1Ö/1S

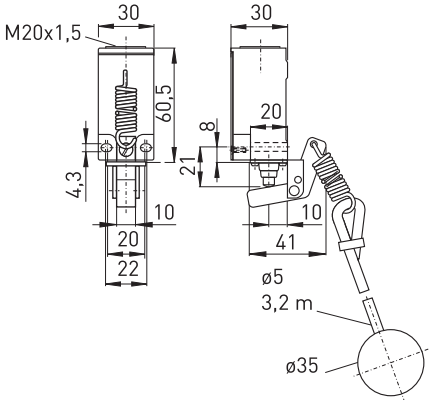

Features/Options
- Suitable for wall- and ceiling mounting
- Version for door/gate opening ES 95 WH/90° 1Ö/1S: icluding 3.2 m long nylon pull-wire and rubber ball, slow action 1 NC/1 NO contact

Slow action	Order Number
ES 95 WH/90° 1Ö/1S-3,2m	95014910

Pull-wire switches
// Series ES 51 Z

Features/Options
- Metal enclosure
- Wall mounting
- Slow action: 2 contacts
- Small design
- Pull-wire function

// ES 51 Z

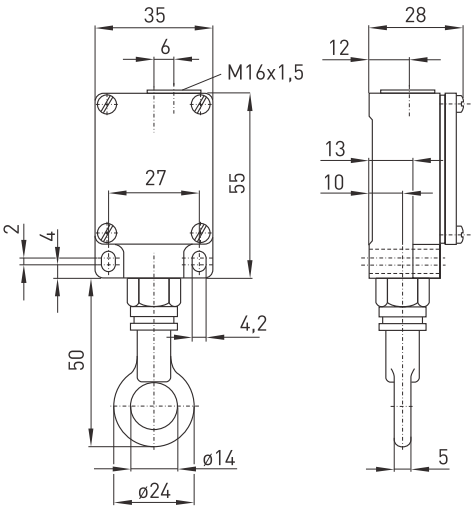

Technical data

Standards	IEC/EN 60947-5-1
Enclosure	aluminium die-cast, enamel finish
Cover	steel, enamel finish
Degree of protection	IP 65 to IEC/EN 60529
Contact material	silver
Switching elements	change-over contact with double break with galvanically separated contact bridges
Switching system	slow action
Connection	M3 screw terminals
Cable section	max. 2.5 mm^2 (incl. conductor ferrules)
Cable entry	1 x M16 x 1.5
U_{imp}	4 kV
U_i	400 V
I_{the}	4 A
Utilisation category	AC-15
I_e/U_e	4 A/400 VAC
Max. fuse rating	4 A gL/gG D-fuse
Ambient temperature	–20 °C ... +80 °C
Mech. life	> 1 million operations
Switching frequency	3600/h
Actuating force	max. 40 N
Features	pull-wire function
Approvals	

Contact variants: switch travel/contacts

	Slow action
1 NC/1 NO contact	ES 51 Z 1Ö/1S 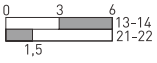

Ordering details ES 51 W Z 1Ö/1S

- 1 NC/1 NO contact
- Z Actuator towing eye
- W Collar
- Series
- S Slow action

//ES 51 Z

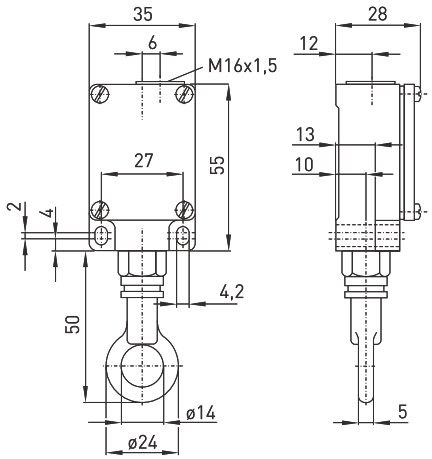

Slow action
ES 51 Z 1Ö/1S

Order Number
51041001

// Collar W

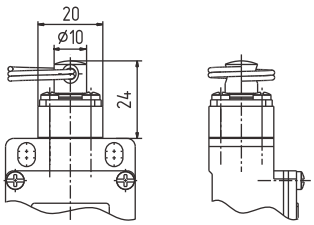

Features/Options
- Collar W to protect against the entry of foreign bodies

Collar/Slow action
ES 51 WZ 1Ö/1S

Order Number
51042001

Features/Options
- Metal enclosure
- Wall or ceiling mounting
- Slow or snap action: 2 contacts
- Pull-wire function

// ES/EM 41 Z

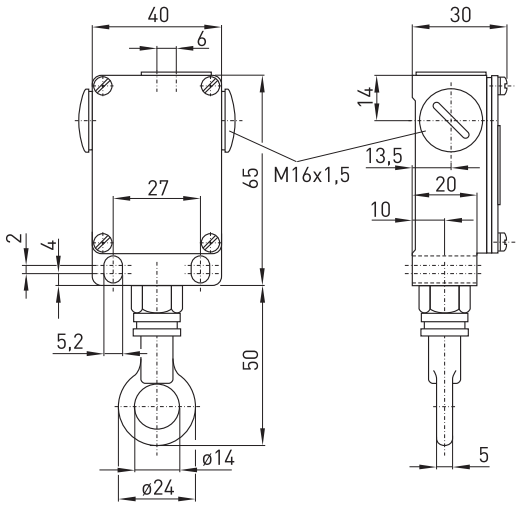

Technical data

Standards	IEC/EN 60947-5-1
Enclosure	aluminium die-cast, enamel finish
Cover	steel, enamel finish
Degree of protection	IP 65 to IEC/EN 60529
Contact material	silver
Switching elements	change-over or 2 NO contacts with double break and galvanically separated contact bridges
Switching system	slow or snap action
Connection	M3.5 screw terminals
Cable section	max. 2.5 mm^2 (incl. conductor ferrules)
Cable entry	3 x M16 x 1.5
U_{imp}	4 kV
U_i	400 V
I_{the}	10 A
Utilisation category	AC-15
I_e/U_e	6 A/400 VAC
Max. fuse rating	6 A gL/gG D-fuse
Ambient temperature	–20 °C ... +80 °C
Mech. life	> 1 million operations
Switching frequency	3600/h
Actuating force	max. 45 N
Features	pull-wire function
Approvals	

Contact variants: switch travel/contacts

	Snap action	Slow action
1 NC/1 NO contact	**EM 41 Z 1Ö/1S** 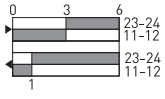	**ES 41 Z 1Ö/1S** 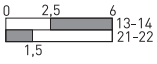
2 NO contacts		**ES 41 Z 2S** 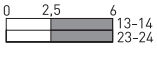

Ordering details

ES 41 W Z 1Ö/1S DM

- DM Ceiling mounting, including ceiling mounting plate
- 1 NC/1 NO contact, (2S 2 NO contacts)
- Z Actuator towing eye
- W Collar
- Series
- S Slow action (M snap action)

// ES/EM 41 Z

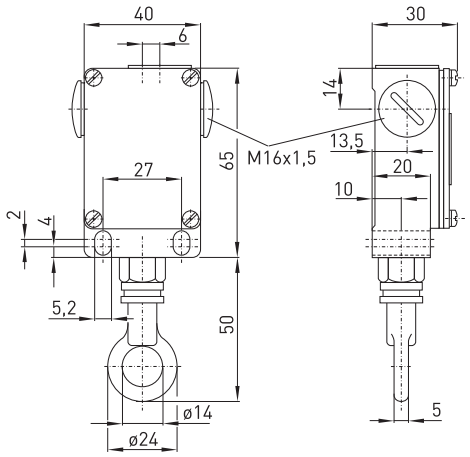

Slow action	Order Number
ES 41 Z 1Ö/1S	41041001
ES 41 Z 2S	41641001
Snap action	**Order Number**
EM 41 Z 1Ö/1S	41141001

// Collar W

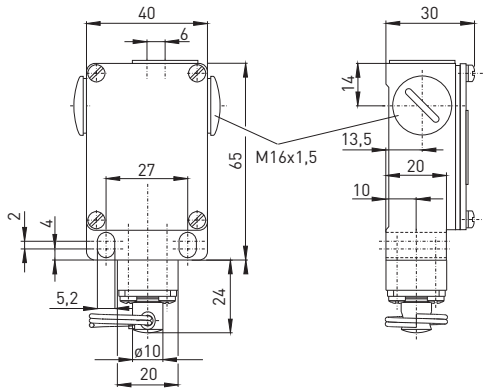

Features/Options
- Watertight collar for protection against penetration of dirt

Collar/Slow action	Order Number
ES 41 WZ 1Ö/1S order No. 41042001	
ES 41 WZ 2S order No. 416421001	
Collar/Snap action	**Order Number**
EM 41 WZ 1Ö/1S order No. 41142001	

// Ceiling mounting DM

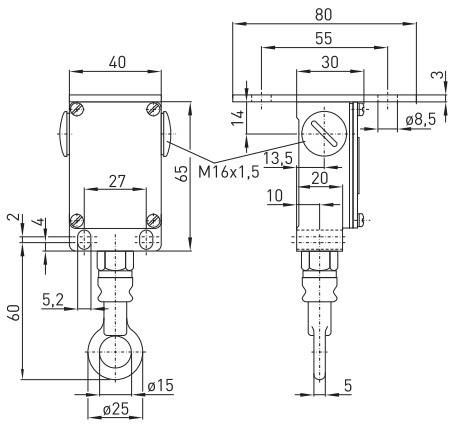

Features/Options
- Version for ceiling mounting with mounting plate

Ceiling mounting/Slow action	Order Number
ES 41 Z 1Ö/1S ceiling mounting DM	41041922

// ES 41 WH/90° 1Ö/1S

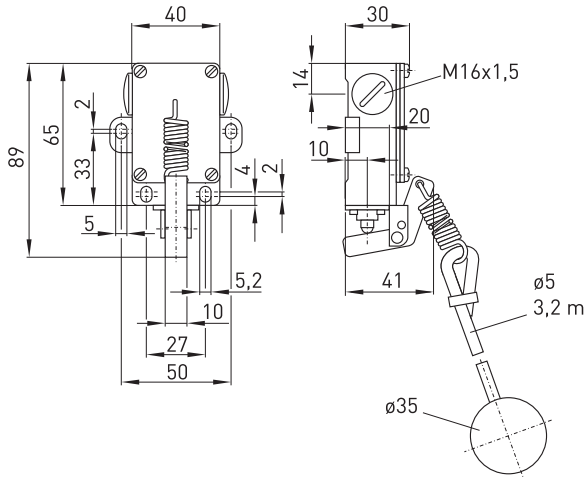

Features/Options
- Version for ceiling and wall mounting ES 41 WH/90° 1Ö/1S
- Version for door/gate opening ES 41 WH/90° 1Ö/1S:
  icluding 3.2 m long nylon pull-wire with rubber ball,
  inclusiding mounting screws and rawlplugs, metal enclosure with
  thermoplastic cover, slow action 1 NC/1 NO contact

Slow action	Order Number
ES 41 WH/90° 1Ö/1S-3,2 mit	41014916

PRODUCTION PROCESS ASSEMBLY
MOUNTING OF PULL-WIRE SWITCHES

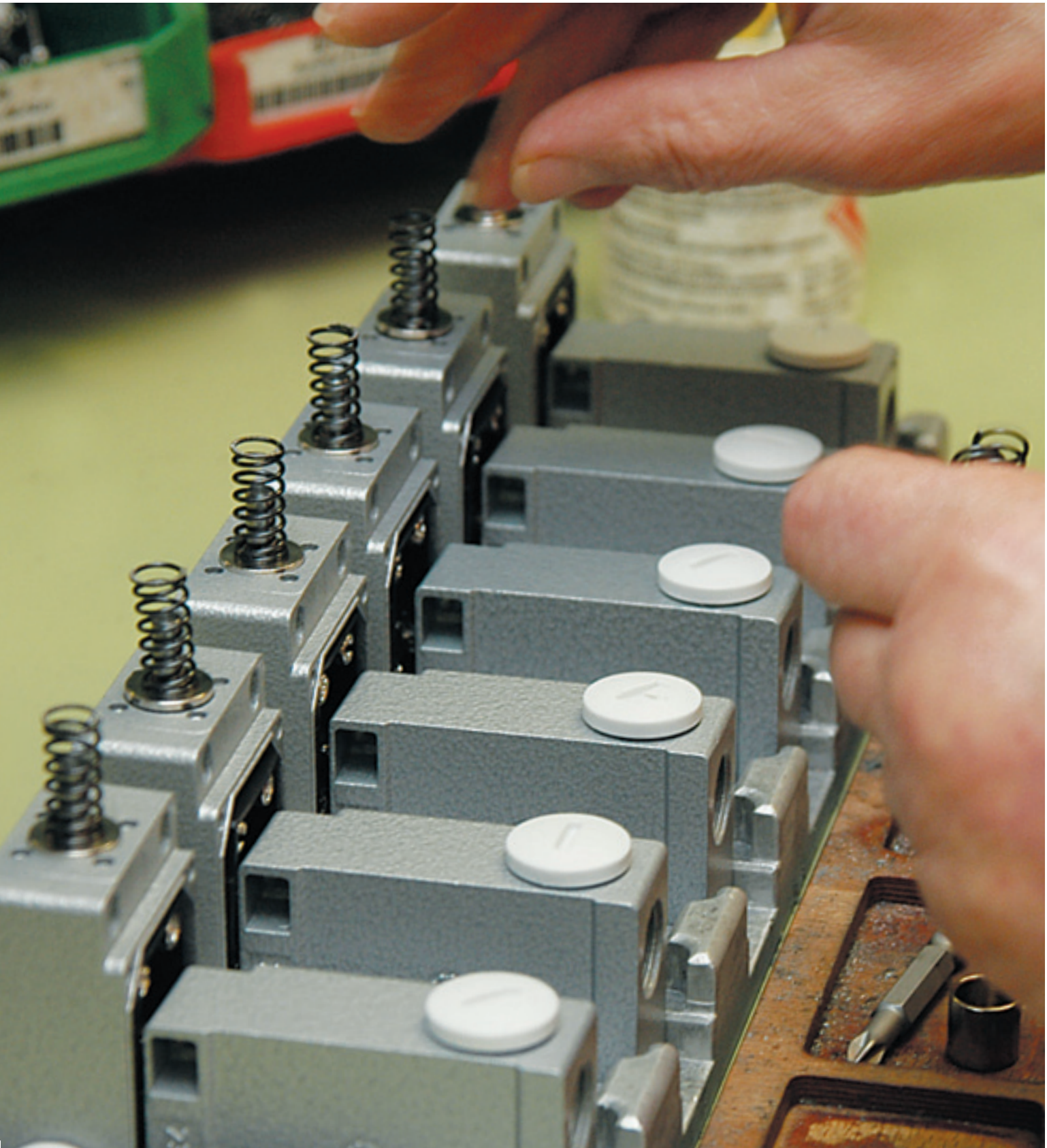

Pull-wire switches
// Series ES/EM 61 Z

Features/Options
- Metal enclosure
- Wall or ceiling mounting
- Slow or snap action: 2 contacts
- Pull-wire function
- Ex version available

// ES/EM 61 Z

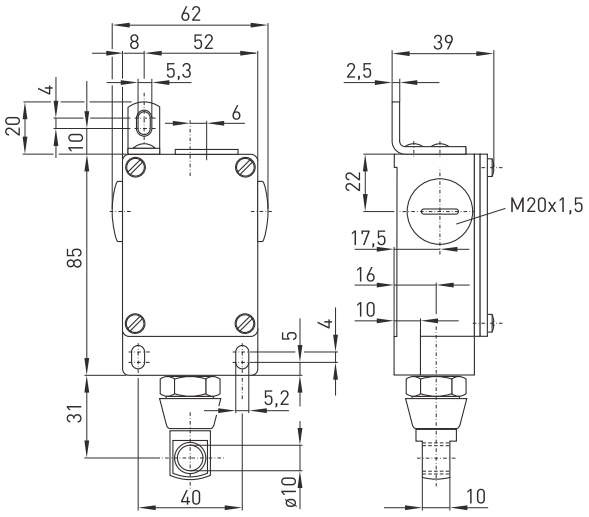

Technical data

Standards	IEC/EN 60947-5-1
Enclosure	aluminium die-cast, enamel finish
Cover	steel, enamel finish
Degree of protection	IP 65 to IEC/EN 60529
Contact material	silver
Switching elements	change-over or 2 NO contacts with double break and galvanically separated contact bridges
Switching system	slow or snap action
Connection	M3.5 screw terminals
Cable section	max. 2.5 mm^2 (incl. conductor ferrules)
Cable entry	3 x M16 x 1.5
U_{imp}	6 kV
U_i	400 V
I_{the}	10 A
Utilisation category	AC-15
I_e/U_e	ES 61: 16 A/400 VAC, EM 61: 6 A/400 VAC
Max. fuse rating	ES 61: 16 A gL/gG D-fuse EM 61: 6 A gL/gG D-fuse
Ambient temperature	–20 °C ... +80 °C
Mech. life	> 1 million operations
Switching frequency	3600/h
Actuating force	max. 50 N
Features	pull-wire function
Approvals	

Contact variants: switch travel/contacts

	Snap action	Slow action
1 NC/1 NO contact	**EM 61 Z 1Ö/1S** 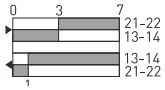	**ES 61 Z 1Ö/1S** 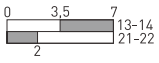
2 NO contacts		**ES 61 Z 2S** 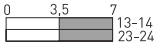

Ordering details

ES 61 W Z 1Ö/1S DM

- DM Ceiling mounting, including ceiling mounting plate
- 1 NC/1 NO contact, (2S 2 NO contacts)
- Z Actuator towing eye
- W Collar
- Series
- S Slow action (M snap action)

Pull-wire switches
// Series ES/EM 61 Z, Varianten

Features/Options
- Version for wall mounting with mounting angle
- Indicator lamps for various voltages are indicated in chapter accessories in the appendix

// ES/EM 61 Z

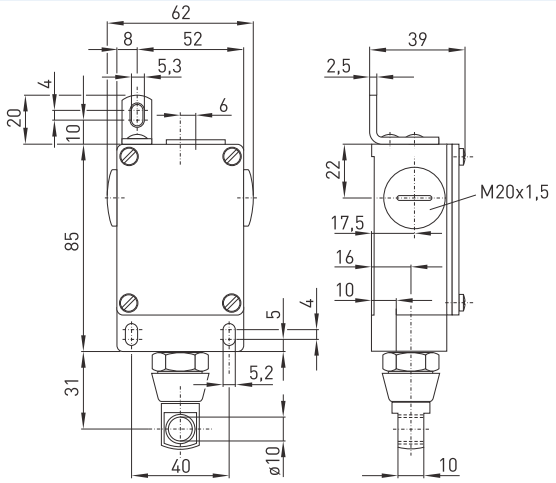

Slow action	Order Number
ES 61 Z 1Ö/1S	61041001
ES 61 Z 2S	61641001

Snap action	Order Number
EM 61 Z 1Ö/1S	61141001

// Collar W

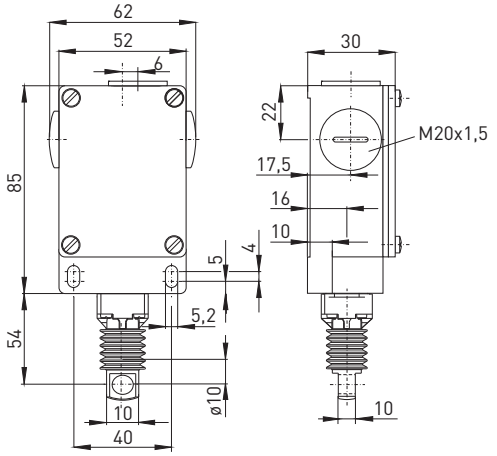

Features/Options
- Watertight collar for protection against penetration of dirt

Collar/Slow action	Order Number
ES 61 Z 1Ö/1S	61042001
ES 61 Z 2S	61642001

Collar/Snap action	Order Number
EM 61 Z 1Ö/1S	61142001

// Ceiling mounting DM

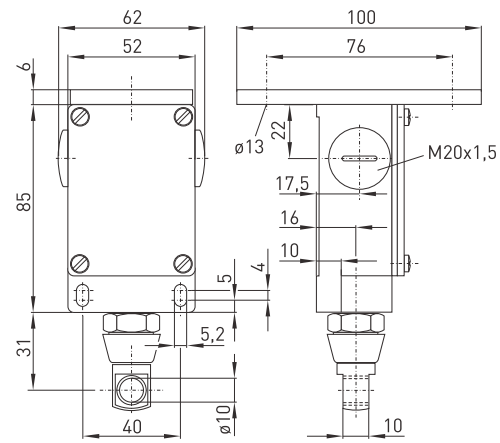

Features/Options
- Version for ceiling mounting with mounting plate

Ceiling mounting/Slow action	Order Number
ES 61 Z 1Ö/1S Deckenbefestigung	61041910

Pull-wire switches
// Series ZS 70 Z

Features/Options
- Thermoplastic enclosure
- Wall mounting
- Snap action: 2 contacts
- Pull-wire function

// ZS 70 Z

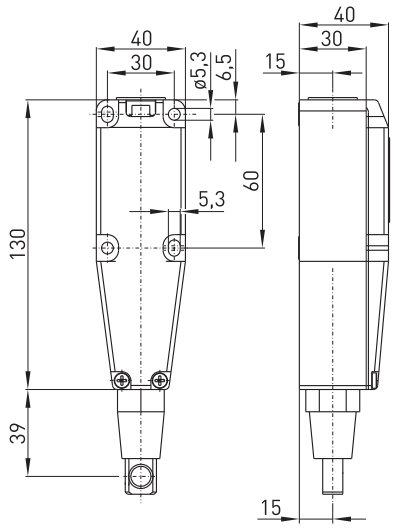

Technical data

Standards	IEC/EN 60947-5-1
Design	mounting dimensions to DIN EN 50041
Enclosure	glass-fibre reinforced, shockproof thermoplastic, ultramid
Cover	glass-fibre reinforced, shockproof thermoplastic, ultramid
Degree of protection	IP 67 to IEC/EN 60529
Contact material	silver
Switching elements	change-over contact with double break with galvanically separated contact bridges
Switching system	snap action, positive break NC contacts ⊖ to IEC 60947-5-1
Connection	screw terminals
Cable section	max. 2.5 mm^2 (incl. conductor ferrules)
Cable entry	1 x M20 x 1.5
U_{imp}	6 kV
U_i	400 V
I_{the}	6 A
Utilisation category	AC-15
I_e/U_e	6 A/400 VAC
Max. fuse rating	6 A gL/gG D-fuse
Ambient temperature	–10 °C ... +70 °C
Mech. life	> 1 million operations
Switching frequency	1800/h
Actuating force	max. 85 N
Features	pull-wire function
Approvals	

Contact variants: switch travel/contacts

	Snap action	Order No.
1 NC/1 NO contact	ZS 70 Z 1Ö/1S	70141002

Ordering details ZS 70 Z 1Ö/1S

- 1 NC/1 NO contact
- Z Actuator towing eye
- Series
- Pull-wire switch

Features/Options
- Metal enclosure
- Wall mounting
- Slow or snap action: 2 contacts
- Pull-wire function with or without latching
  snap action: without latching
  slow action: with latching
- Collar W to protect against the entry of foreign bodies
- Indicator lamps for various voltages are indicated in chapter accessories in the appendix

// ZS 71 Z

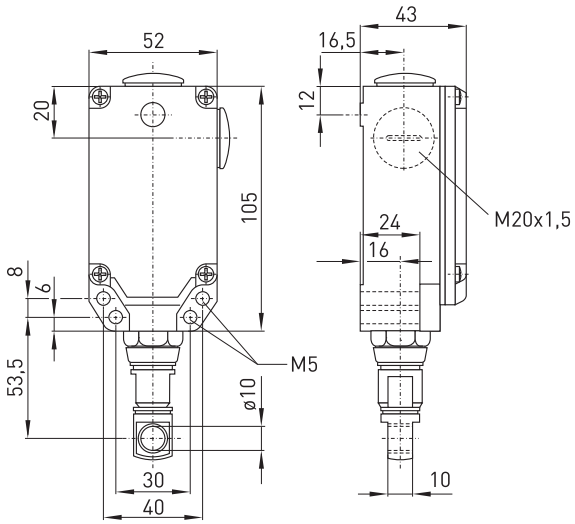

Technical data

Standards	IEC/EN 60947-5-1
Enclosure	aluminium die-cast, enamel finish
Cover	thermoplastic, ultramid
Protection class	IP 65 to IEC/EN 60529
Contact material	silver
Switching elements	change-over contact with double break mit with galvanically separated contact bridges
Switching system	slow or snap action, positive break NC contacts ⊖ to IEC 60947-5-1
Connection	screw terminals
Cable section	max. 2.5 mm² (incl. conductor ferrules)
Cable entry	2 x M20 x 1.5
U_{imp}	ZS 71 Z: 6 kV, ZS 71 Z RE: 4 kV
U_i	400 V
I_{the}	ZS 71 Z: 6 A ZS 71 Z RE: 4 A
Utilisation category	AC-15
I_e/U_e	ZS 71 Z: 6 A/400 VAC, ZS 71 Z RE: 4 A/400 VAC
Max. fuse rating	ZS 71 Z: 6 A gL/gG D-fuse ZS 71 Z RE: 4 A gL/gG D-fuse
Ambient temperature	–25 °C ... +70 °C
Mech. life	> 1 million operations
Indicator lamp	as option
Switching frequency	1800/h
Actuating force	ZS 71 Z: max. 80 N, ZS 71 Z RE: max. 80 N
Features	pull-wire function with or without latching
Approvals	

Contact variants: switch travel/contacts

	Snap action	Slow action
1 NC/1 NO contact	ZS 71 Z 1Ö/1S	ZS 71 Z 1Ö/1S RE
	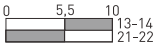	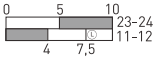
Order Number	**71141919**	**71041901**

Ordering details ZS 71 W Z 1Ö/1S RE-G

- Indicator lamp, position left side cable entry, see accessories (appendix)
- RE latching
- 1 NC/1 NO contact
- Z Actuator towing eye
- W Collar
- Series
- Pull-wire switch

ES 41 DB

// Series ES 41 DB
from page 78

Slack-wire switches

Application

Slack-wire switches are suitable for applications with handling equipment. There they are for example mounted at a wire in order to monitor the wire tension.

Design and mode of operation

Slack-wire switches monitor the pull-wire tension. With correct tension present, the switch is actuated. In case of wire breakage or stretching of the wire the switch is released and thus switches the system off. In addition, this signal can depending on the construction of the system generate an optical or accustic indicating or warning signal.

All slack-wire switches presented in this chapter bear the CE mark according to the Low Voltage Directive 06/95/EC.

Application

Monitoring of wire tension

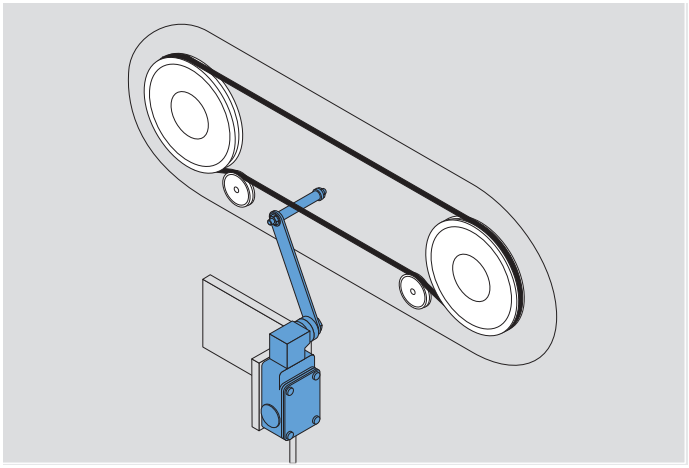

Slack-wire switches in released state after wire breakage

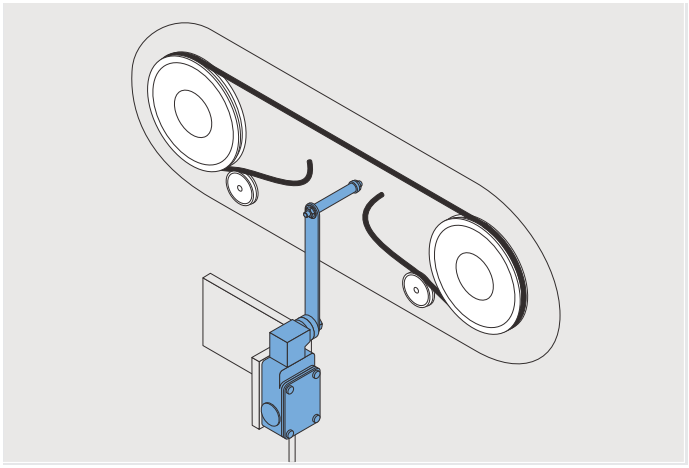

Slack-wire switches
// Series ES 41 DB

Features/Options
- Metal enclosure
- Slow or snap action: 2 contacts
- Available with various actuating rollers

// ES 41 DB

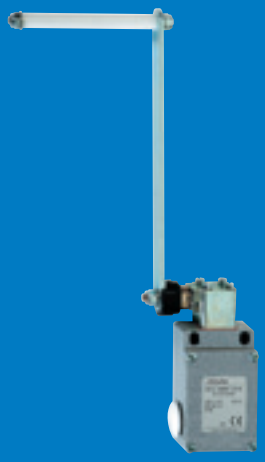

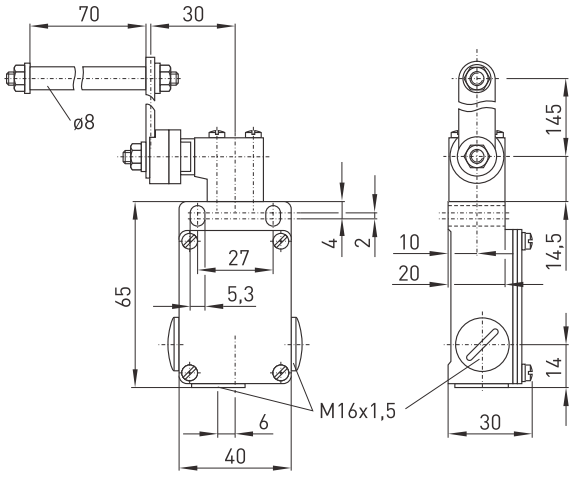

Technical data

Standards	IEC/EN 60947-5-1
Enclosure	aluminium die-cast, enamel finish
Cover	steel, enamel finish
Degree of protection	IP 65 to IEC/EN 60529
Contact material	silver
Switching elements	change-over contact with double break or 2 NC contacts and galvanically separated contact bridges
Switching system	slow or snap action
Connection	M3.5 screw terminals
Cable section	max. 2.5 mm^2 (incl. conductor ferrules)
Cable entry	3 x M16 x 1.5
U_{imp}	4 kV
U_i	400 V
I_{the}	6 A
Utilisation category	AC-15
I_e/U_e	6 A/400 VAC
Max. fuse rating	6 A gL/gG D-fuse
Ambient temperature	–20 °C ... +80 °C
Mech. life	> 1 million operations
Switching frequency	max. 1800/h
Approvals	

Contact variants: switch travel/contacts

	Snap action	Slow action
1 NC/1 NO contact	**EM 41 DB 1Ö/1S** 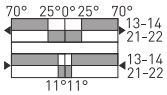	**ES 41 DB 1Ö/1S** 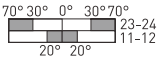
2 NC contacts		**ES 41 DB 2Ö** 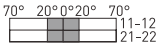
1 NC/1 NO contact with overlapping		**ES 41 DB UE** 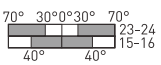

Ordering details

EM 41 DB/ 1Ö/1S

- 1Ö/1S: 1 NC/1 NO contact (2Ö 2 NC contacts, UE contact overlapping), other configurations possible
- DB Slack-wire lever
- Series
- M Snap action (S slow action)

// ES 41 DB

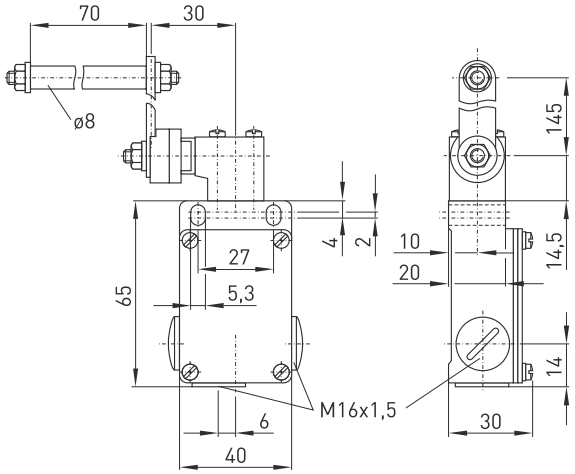

Slow action	Order Number
ES 41 DB/90° 1Ö/1S	41021903
ES 41 DB/90° 2Ö	41521907
ES 41 DB/90° UE	41221903

Snap action	Order Number
EM 41 DB/90° 1Ö/1S	41121920

Appendix
// Accessories Emergency pull-wire and pull-wire switches

// Accessories		// Order number	
Indicator lamp glow lamp - Lamp cap red - M20 x 1.5 - 24 VDC or 230 VAC - Ordering unit: 1 piece	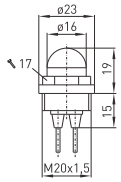	Indicator lamp glow lamp 24 VDC Indicator lamp glow lamp 230 VAC	01.41.5101 01.41.5100
Indicator lamp Multi-LED red - Lamp cap red - M20 x 1.5 - 24 VDC, 115 VAC or 230 VAC - Ordering unit: 1 piece	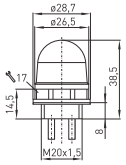	Indicator lamp Multi-LED RD 24 VDC Indicator lamp Multi-LED RD 115 VAC Indicator lamp Multi-LED RD 230 VAC	01.41.5105 01.41.5103 01.41.5116
Indicator lamp Multi-LED white - Lamp cap white - M20 x 1.5 - 24 VDC, 115 VAC or 230 VAC - Ordering unit: 1 piece	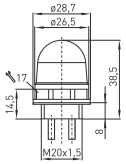	Indicator lamp Multi-LED WH 24 VDC Indicator lamp Multi-LED WH 115 VAC Indicator lamp Multi-LED WH 230 VAC	01.41.5106 01.41.5104 01.41.5115
Pulley - To guide the pull-wire where the path is not a straight line - For pull-wire with red PVC sheath Ø 5 mm (steel core Ø 3 mm) - Ordering unit: 1 piece	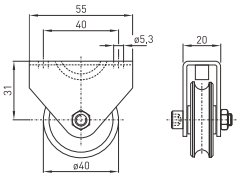	Pulley	04.73.9102
Pull-wire - Steel core Ø 3 mm with red PVC sheath - Total diameter 5 mm - Ordering unit: per metre - Available with stainless steel core		Pull-wire Ø 5 mm per metre Pull-wire stainless steel Ø 5 mm per metre	01.09.0011 01.10.0059
Complete Pull-wire set - 5 m pull-wire Ø 3 mm with 2 mm PVC sheath, 2 wire clamps DIN 741, 1 wire thimble DIN 6899, 1 eye bolt DIN 444 and 1 Duplex wire clamp		Complete pull-wire set, 5 m Complete pull-wire set, 10 m Complete pull-wire set, 15 m Complete pull-wire set, 20 m Complete pull-wire set, 25 m Complete pull-wire set, 50 m	04.61.7101 04.61.7106 04.61.7107 04.61.7118 04.61.7108 04.61.7115
Pull-wire for emergency pull-wire sw. - Pull-wire yellow (polypropylene) - 1, 2, 3 or 4 m long - With rubber ball and mounting clamp		Pull-wire with ball emergency pull-wire sw. 1 m Pull-wire with ball emergency pull-wire sw. 2 m Pull-wire with ball emergency pull-wire sw. 3 m Pull-wire with ball emergency pull-wire sw. 4 m	04.73.7101 04.73.7103 04.73.7104 04.73.7102
Pull-wire for pull-wire switches - Pull-wire yellow (polypropylene) - 1, 2, 3 or 4 m long - With rubber ball and Duplex wire clamp - Ordering unit: 1 piece		Pull-wire with ball pull-wire switches 1 m Pull-wire with ball pull-wire switches 2 m Pull-wire with ball pull-wire switches 3 m Pull-wire with ball pull-wire switches 4 m	04.73.7106 04.73.7107 04.73.7108 04.73.7109
Wire clamp - For pull-wire with steel core Ø 3 mm - Ordering unit: 1 piece - Wire clamp made of stainless steel available		Wire clamp 3 mm Wire clamp 3 mm stainless steel	01.10.0003 01.10.0061

// Accessories		// Order number	
Duplex wire clamp - For pull-wire with steel core Ø 3 mm - Ordering unit: 1 piece	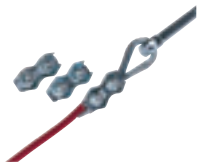	Duplex wire clamp	01.10.0004
Egg-shaped wire clamp - For pull-wire with steel core Ø 3 mm - Ordering unit: 1 piece		Egg-shaped wire clamp 3 mm	01.10.0091
Wire thimble 3B - Per DIN 6899 - For pull-wire with steel core Ø 3 mm - Wire clamp made of stainless steel available		Wire thimble 3B Wire thimble Niro	01.10.0001 01.10.0084
Eye bolt incl. nut - Per DIN 444 - Available made of stainless steel - Ordering unit: 1 piece		Eye bolt M8x70 with nut Eye bolt M8 x 70 stainless steel Eye bolt BM10 x 40 with nut	04.00.7112 01.03.0210 01.03.0208
Compensation spring/travel limitation - Adaption of length expansions caused by changes in temperature - Stainless steel 1.4310 - Ordering unit: 1 piece	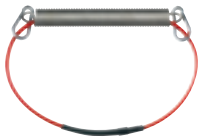	Compensation spring ZS 71-100N Compensation spring ZS 73/75-200N Compensation spring ZS 73/75-400N Compensation spring ZS 73/75 S Compensation spring ZS 80	04.00.7154 04.00.7155 04.00.7157 04.00.7158 04.00.7156
Compensation spring RZ130K for ZS 90 S - Adaption of length expansions caused by changes in temperature - Stainless steel 1.4310 - Ordering unit: 1 piece	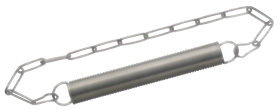	Compensation spring RZ-130K	04.76.7101
Tensioner M6 - For precise adjustment of pull-wire pre-stress - Per DIN 1480 - Adjustable von 145 mm bis 225 mm		Tensioner M6	01.10.0010
Tensioner M8 - For precise adjustment of pull-wire pre-stress - Made of stainless steel, adjustable from 160 mm to 255 mm		Tensioner M8 Niro	01.10.0062
Cable tensioner system TS 65 - For pull-wire with steel core Ø 4 - 6 mm incl. sheath - Adjustment range max. 65 mm - Diameter of eyebolt min. 8 mm - Pull-wire length max. 75 m	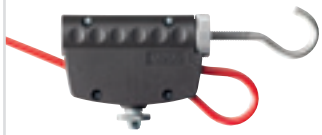	Cable tensioner system TS 65	04.71.7101

Explanation of symbols

positive break NC contacts

positive break travel/angle

latching point

wire breakage detection

wire pull detection

spanner size across flats

CSA/UL approval, Canada

CCC approval, China

Gost approval, Russia

Inmetro approval, Brazil

TÜV prototype-tested

BG prototype-tested

conformity to standards, see declaration of conformity

I_e thermal test current

I_{the} Thermischer Dauerstrom

U_e rated operating voltage

U_i rated insulation voltage

U_{imp} rated impulse withstand voltage

Explanation of travel diagrams

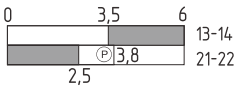

Contact open
Contact closed

X1-X2 NC contact
X3-X4 NO contact
X5-X6 contact overlapping

Errata and technical modifications reserved.

steute develops and manufactures safe switchgear for demanding and critical application. Besides a comprehensive standard range of products for »Wireless, Automation, Extreme and Meditec« applications, we also and increasingly develop customised switchgear for extreme conditions in all four business fields. Some examples: emergency pull-wire switches for the mining industry, position switches for industrial automation and control panels for laser surgery. Our head office is in Löhne, Westphalia, Germany; worldwide sales are conducted through steute's subsidiaries and trading partners.

steute
Schaltgeräte GmbH & Co. KG
Brückenstraße 91
32584 Löhne, Germany
Phone + 49 (0) 57 31 7 45-0
Telefax + 49 (0) 57 31 7 45-200
info@steute.com
www.steute.com

01.26.0374 / 117 83 98 / 08.2011 / 1000 wd