Position switch with safety function
ES 14 VKU 1Ö/1S - 2m
Číslo materiálu: 1189124 (Staré číslo materiálu: 14062002)

Vlastnosti/možnosti

- Thermoplastic enclosure
- Double insulated ⧈
- Slow action ⊖, change-over contact with double break
- Mounting details to EN 50047
- Suitable for in-line mounting
- With pre-wired cable, cable length 2 m
- Actuator: Vertical ball plunger VKU
- Actuation from any direction
- Actuator with captive stainless steel ball

Rozměry

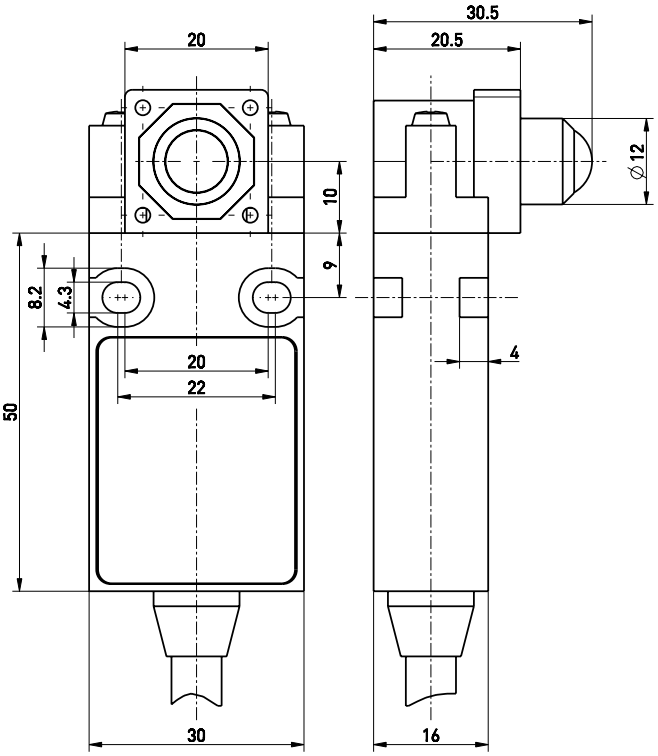

Technická data

Standards	EN ISO 13849-1; EN 60947-5-1
Enclosure	glass-fibre reinforced, shock-proof thermoplastic, self-extinguishing UL 94-V0
Degree of protection	IP 67 to IEC/EN 60529
Contact material	silver
Switching system	slow action, positive break NC contacts ⊖
Switching elements	change-over contact with double break, galvanically separated contact bridges
Connection	pre-wired cable H05VV-F
Cable cross-section	4 x 0.75 mm²
B_{10d} (10 % Load)	2 million
T_M	max. 10 years
U_{imp}	4 kV
U_i	250 V
I_{the}	6 A
I_e/U_e	6 A/250 VAC; 0.25 A/230 VDC
Utilisation category	AC-15; DC-13
Max. fuse rating	6 A gG/gN fuse
Ambient temperature	–20 °C ... +75 °C
Mechanical life	> 1 million operations
Frequency of operation	1800/h
Repeat accuracy of switching points	± 0.1 mm
Contact gap	max. 2 x 4 mm
Approvals	

Omyly a technické změny vyhrazeny.

Contact diagram

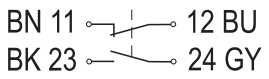

Switching diagram

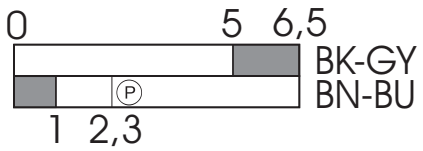

steute Schaltgeräte GmbH & Co. KG
Brückenstraße 91
32584 Löhne, Německo
Telefon +49 (0) 5731 745-0
Telefax +49 (0) 5731 745-200
info@steute.com
www.steute.com