Position switch
EM 14 - 5m
Číslo materiálu: 1163617 (Staré číslo materiálu: 14701007)

Vlastnosti/možnosti

- Thermoplastic enclosure
- Double insulated ⧈
- Snap action, change-over contact with single break
- Mounting details to EN 50047
- Suitable for in-line mounting
- With pre-wired cable, cable length 5 m
- Actuator: Plunger
- Actuating speed max. 0.5 m/s with a vertical actuating angle of 0°

Rozměry

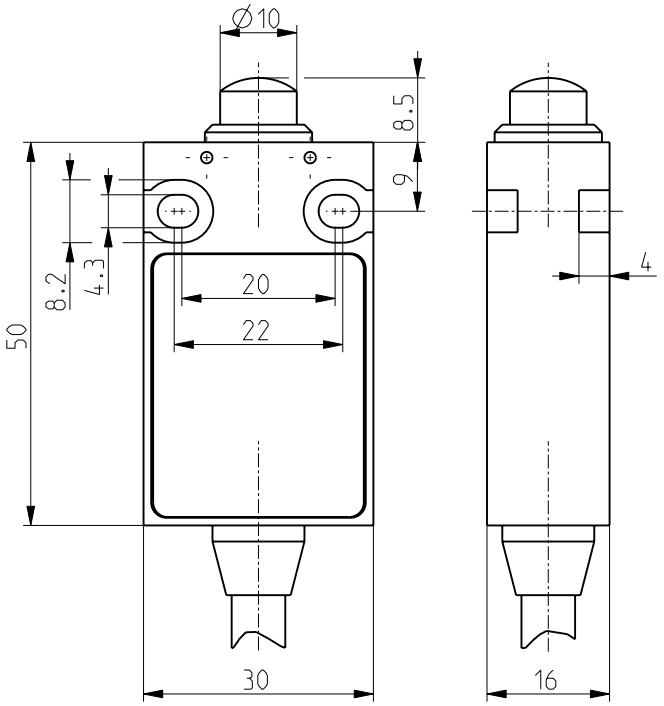

Technická data

Standards	EN 60947-5-1
Enclosure	glass-fibre reinforced, shock-proof thermoplastic, self-extinguishing UL 94-V0
Degree of protection	IP 67 to IEC/EN 60529
Contact material	silver
Switching system	snap action
Switching elements	change-over contact with single break
Connection	pre-wired cable H05VV-F
Cable cross-section	3 x 0.75 mm²
U_{imp}	4 kV
U_i	250 V
I_{the}	5 A
I_e/U_e	5 A/250 VAC; 0.16 A/230 VDC
Utilisation category	AC-15; DC-13
Max. fuse rating	5 A gG/gN fuse
Ambient temperature	–20 °C ... +75 °C
Mechanical life	> 1 million operations
Frequency of operation	1800/h
Repeat accuracy of switching points	± 0.1 mm
Contact gap	max. 2 x 4 mm
Approvals	

Omyly a technické změny vyhrazeny.

Contact diagram

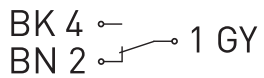

Switching diagram

steute Schaltgeräte GmbH & Co. KG
Brückenstraße 91
32584 Löhne, Německo
Telefon +49 (0) 5731 745-0
Telefax +49 (0) 5731 745-200
info@steute.com
www.steute.com